VALVES

pressure operated
stainless steel body
with flanges PN40, DIN and ANSI Class 300, DN 15 to 50

NC 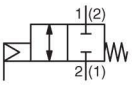

NO 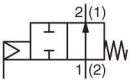

2/2
Series
T298

FEATURES

- *Ruggedly built valve, particularly recommended for use with steam, superheated water, corrosive fluids*
- *High-performance, maintenance-free stuffing box, resistant to thermal shock*
- *Pressure can be applied to any port as needed by the process*
- *Anti-waterhammer design (fluid entry at orifice 1), recommended for use with liquids*
- *Vacuum operation up to 10^{-2} mbar (PTFE and PEEK discs)*
- *Optical position indicator as standard*
- *Autoclavable valve for use at high ambient temperatures (up to 180°C)*
- *The valves satisfy Pressure Equipment Directive 2014/64/EU*
- *The valves in conformity with IEC 61508 Standard (2010 route 2_H version) certified with integrity levels: SIL 2 for HFT = 0*

GENERAL

Differential pressure	0 to 40 bar [1 bar =100 kPa]
Maximum allowable pressure	40 bar (within the specified limits, see diagram I)
Maximum back pressure	40 bar / 20 bar for PEEK sealing
Ambient temperature range	-20°C to +180°C [Option: -55°C to +70°C]
Maximum viscosity	5000 cSt (mm²/s)
Pilot fluid	Air
Max. pilot pressure	10 bar
Min. pilot pressure	See graphs below

fluids (✳)	temperature range	disc seal (✳)
DN 15-20-25: air and gas groups 1 & 2 DN 32-40-50: air and gas group 2 all DN: water, oil, liquids groups 1 & 2 and steam	-10°C to +233°C	PEEK
	-10°C to +250°C	metal-to-metal
	-10°C to +180°C	PTFE

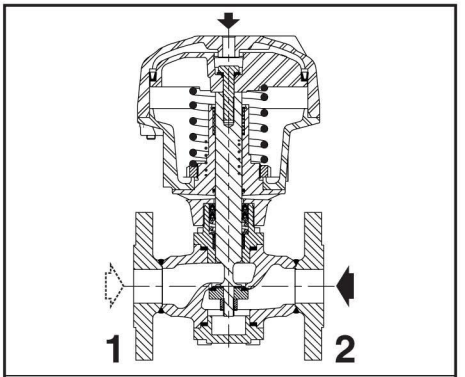

NC function

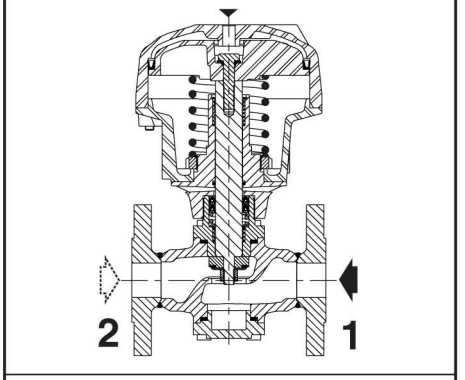

NO function

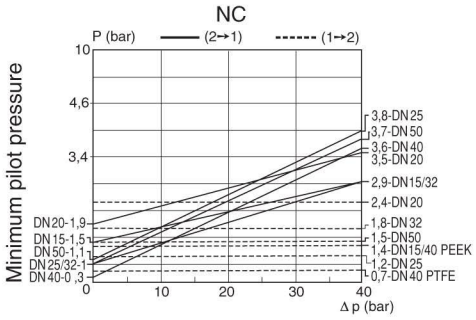

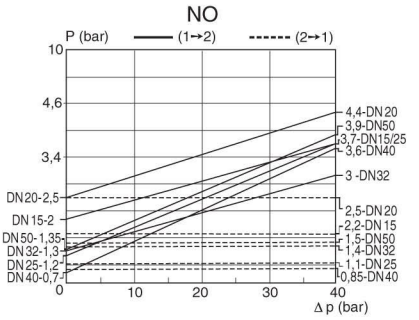

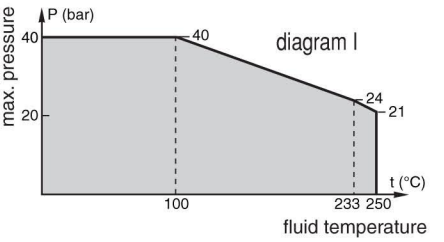

SPECIFICATIONS

Connection	Flanges PN40, type 21 (ISO 7005 / EN 1092-1) ANSI Class 300 ANSI B16-5
Face-to-face dimensions	EN 558-1
Face de joint	Type B

GENERAL

MATERIALS IN CONTACT WITH FLUID (✳) Ensure that the compatibility of the fluids in contact with the materials is verified	
Body and plug	304 stainless steel
Stuffing box housing	304 stainless steel
Stem, disc	431 stainless steel
Stuffing box packing	PTFE chevrons
Disc seals	PEEK or PTFE or Stainless steel
Valve body seal	PTFE

OTHER MATERIALS

Operator	Aluminium, nickel plated
Screws	Galvanized steel

(✳) Ensure that the compatibility of the fluids in contact with the materials is verified.

01189GB-2019/R01
Availability, design and specifications are subject to change without notice. All rights reserved.

Pneutrol International Limited
UK Office
5 Caulside Drive, Antrim, BT41 2DU
United Kingdom
TEL: +44 (0) 289448 1808
www.valves-direct.com

sales@pneutrol.com
European Office
Unit 6, Saint Anthony's Business Park, Ballymount Road, D22 VW95
Ireland
TEL: +353 (0) 1 4373653
www.valves-direct.com

OPTIONS

Low temperature (media and ambient temperature), PTFE disc seal (-55°C to +70°C), see “15-DIGIT PRODUCT CODE” (✶) (1)
Oxygen service, max. fluid pressure 15 bar, max. fluid temperature 150°C, PTFE disc, see “15-DIGIT PRODUCT CODE”
Signalling box, see “15-DIGIT PRODUCT CODE”: - Dual mechanical contacts or dual inductive contacts (PNP 3 wires) - Dual inductive contacts ATEX Ex ia (NAMUR 2 wires) - Dual mechanical contact ATEX Ex d IIC T6 (Crouzet contacts type 83101-I-W1, ambient temperature -20°C to +80°C) - Dual mechanical contact ATEX Ex d IIC T6 (Honeywell contact type 1HS1, ambient temperature -55°C to +70°C). Use for low temperature option
For use in explosive atmospheres, zones 1/21-2/22, categories 2-3 to ATEX Directive 2014/34/EU: Ex IIC 2GD c x°C (Tx)
CUTR Certification (EAC), see “15-DIGIT PRODUCT CODE”
Valve seat leakage class VI as defined by FCI-2 ANSI B16.104 or Class A or B following EN 12266-1, contact us
Manual override on the top of the actuator (Manual safety device), contact us
Other flange types are available on request
Re-buildable valve program; rebuild services, contact us

(✶) Ensure that the compatibility of the fluids in contact with the materials is verified.
(1) The minimum ambient temperature of the valve is determined by the limitations of minimum temperature indicated.

SPECIFICATIONS

DN	orifice size	flow coefficient Kv 1 → 2		flow coefficient Kv 2 → 1		pilot pressure (bar)		operating pressure differential	operator diameter	catalogue number		
										disc sealing		
	(mm)	(m^3/h)	(l/min)	(m^3/h)	(l/min)	min.	max.	(bar)	(mm)	PTFE	PEEK	metal-to-metal
NC - Normally closed												
										Flanges **DIN EN 1092-1**		
15	15	4,4	73	5	83	❊	10	40	80	**T298B037DTA0000**	**T298B037DVA0000**	**T298B037DEA0000**
20	20	7,7	128	8,5	142	❊	10	40	100	**T298B04DDTA0000**	**T298B04DDVA0000**	**T298B04DDEA0000**
25	25	11,5	192	12	200	❊	10	40	100	**T298B05DDTA0000**	**T298B05DDVA0000**	**T298B05DDEA0000**
32	32	18	300	18	300	❊	10	40	150	**T298B06KDTA0000**	**T298B06KDVA0000**	**T298B06KDEA0000**
40	40	29	483	29	483	❊	10	40	150	**T298B07KDTA0000**	**T298B07KDVA0000**	**T298B07KDEA0000**
50	50	57	950	57	950	❊	10	40	200	**T298B08MDTA0000**	**T298B08MDVA0000**	**T298B08MDEA0000**
										Flanges **ANSI 300**		
15	15	4,4	73	5	83	❊	10	40	80	**T298B038PTA0000**	**T298B038PVA0000**	**T298B038PEA0000**
20	20	7,7	128	8,5	142	❊	10	40	100	**T298B04EPTA0000**	**T298B04EPVA0000**	**T298B04EPEA0000**
25	25	11,5	192	12	200	❊	10	40	100	**T298B05EPTA0000**	**T298B05EPVA0000**	**T298B05EPEA0000**
32	32	18	300	18	300	❊	10	40	150	**T298B06LPTA0000**	**T298B06LPVA0000**	**T298B06LPEA0000**
40	40	29	483	29	483	❊	10	40	150	**T298B07LPTA0000**	**T298B07LPVA0000**	**T298B07LPEA0000**
50	50	57	950	57	950	❊	10	40	200	**T298B08NPTA0000**	**T298B08NPVA0000**	**T298B08NPEA0000**
NO - Normally open												
										Flanges **DIN EN 1092-1**		
15	15	3,5	58	3,5	58	❊	10	40	80	**T298B137DTA0000**	**T298B137DVA0000**	**T298B137DEA0000**
20	20	7,2	120	7	117	❊	10	40	100	**T298B14DDTA0000**	**T298B14DDVA0000**	**T298B14DDEA0000**
25	25	11	183	11	183	❊	10	40	100	**T298B15DDTA0000**	**T298B15DDVA0000**	**T298B15DDEA0000**
32	32	18	300	15	250	❊	10	40	150	**T298B16KDTA0000**	**T298B16KDVA0000**	**T298B16KDEA0000**
40	40	28,2	470	28,2	470	❊	10	40	150	**T298B17KDTA0000**	**T298B17KDVA0000**	**T298B17KDEA0000**
50	50	53	883	53	883	❊	10	40	200	**T298B18MDTA0000**	**T298B18MDVA0000**	**T298B18MDEA0000**
										Flanges **ANSI 300**		
15	15	3,5	58	3,5	58	❊	10	40	80	**T298B138PTA0000**	**T298B138PVA0000**	**T298B138PEA0000**
20	20	7,2	120	7	117	❊	10	40	100	**T298B14EPTA0000**	**T298B14EPVA0000**	**T298B14EPEA0000**
25	25	11	183	11	183	❊	10	40	100	**T298B15EPTA0000**	**T298B15EPVA0000**	**T298B15EPEA0000**
32	32	18	300	15	250	❊	10	40	150	**T298B16LPTA0000**	**T298B16LPVA0000**	**T298B16LPEA0000**
40	40	28,2	470	28,2	470	❊	10	40	150	**T298B17LPTA0000**	**T298B17LPVA0000**	**T298B17LPEA0000**
50	50	53	883	53	883	❊	10	40	200	**T298B18NPTA0000**	**T298B18NPVA0000**	**T298B18NPEA0000**

❊ Minimum pilot pressure varies with differential pressure. See piloting chart preceding page.

Pneutrol International Limited
UK Office
5 Caulside Drive, Antrim, BT41 2DU
United Kingdom
TEL: +44 (0) 289448 1808
www.valves-direct.com

sales@pneutrol.com
European Office
Unit 6, Saint Anthony’s Business Park, Ballymount Road, D22 VW95
Ireland
TEL: +353 (0) 1 4373653
www.valves-direct.com

01189GB-2017/R01
Availability, design and specifications are subject to change without notice. All rights reserved.

HOW TO ORDER

15-DIGIT PRODUCT CODE

Configurator - CAD Files

T	298	B	0	3	7	D	V	A00	00

Connection
T = Flanges

Product series
298

Revision letter
B = New Stuffing Box and Disc Materials

Function
0 = Normally closed
1 = Normally open

Diameter (mm)
3 = 15 mm
4 = 20 mm
5 = 25 mm
6 = 32 mm
7 = 40 mm
8 = 50 mm

Operator Dia. - Piloting Connection Dia.
7 = Ø80 mm - G 1/8
8 = Ø80 mm - NPT 1/8 (1)
D = Ø100 mm - G 1/8
E = Ø100 mm - NPT 1/8 (1)
K = Ø150 mm - G 1/4
L = Ø150 mm - NPT 1/4 (1)
M = Ø200 mm - G 1/4
N = Ø200 mm - NPT 1/4 (1)
(1) Connection = NPTF (ANSI B1.20.3) / Flanges ANSI Class 300

Options
A00 = Without
AT1 = ATEX zones 1/21
AT2 = ATEX zones 2/22
LTP = PTFE disc for low temperature (-55°C to +70°C)
MC2 = Dual mechanical Contacts
AD2 = Dual position Contact ATEX Ex d
1S2 = Dual position Contact NAMUR ATEX Ex i
1C2 = Dual inductive contacts PNP 3 wires
02S = PTFE disc for Oxygen service
124 = CUTR Certification
A24 = CUTR Certification for ATEX 1/21
LT1 = AT1 + LTP
LT2 = AT2 + LTP

Disc Seal Material
T = PTFE
E = Metal-to-metal (stainless steel)
V = PEEK

Port Type
D = Flanges DIN EN 1092-1 (ISO 7005) Standard
P = Flanges ANSI Class 300

SPARE PARTS KITS CODE (*)

	PTFE disc seal	PEEK disc version
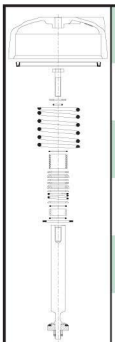 DN 15 NC	M29852671700100	M29852671400100
DN 20 NC	M29852671700400	M29852671400400
DN 25 NC	M29852671700700	M29852671400700
DN 32 NC	M29852671701000	M29852671401000
DN 40 NC	M29852671701300	M29852671401300
DN 50 NC	M29852671701600	M29852671401600
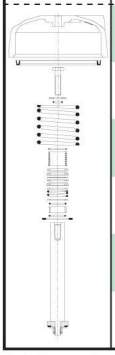 DN 15 NO	M29852671700200	M29852671400200
DN 20 NO	M29852671700500	M29852671400500
DN 25 NO	M29852671700800	M29852671400800
DN 32 NO	M29852671701100	M29852671401100
DN 40 NO	M29852671701400	M29852671401400
DN 50 NO	M29852671701700	M29852671401700

(*) Ensure that the compatibility of the fluids in contact with the materials is verified.

01189GB-2017/R01
Availability, design and specifications are subject to change without notice. All rights reserved.

Pneutrol International Limited
UK Office
5 Caulside Drive, Antrim, BT41 2DU
United Kingdom
TEL: +44 (0) 289448 1808
www.valves-direct.com

sales@pneutrol.com
European Office
Unit 6, Saint Anthony's Business Park, Ballymount Road, D22 VW95
Ireland
TEL: +353 (0) 1 4373653
www.valves-direct.com

INSTALLATION

- The valves can be mounted in any position without affecting operation
- Compatible with ASTM 1, 2 and 3 oils
- Check temperature range of valve body and solenoid pilot valves for suitability. For probability of failure, contact us
- Piloting thread connection: Pipe connections (G*) have standard thread according to ISO 228/1 and ISO 7/1. Pipe connections (G) have standard thread according to ISO 228/1
- Piloting thread connections have standard thread = NPTF (ANSI B1.20.3)
- Declarations of conformity are available on request
- Installation/maintenance instructions are included with each valve

DIMENSIONS (mm), WEIGHT (kg)

Configurator - CAD Files

TYPE 01-02-03-04
"T" flanges connection

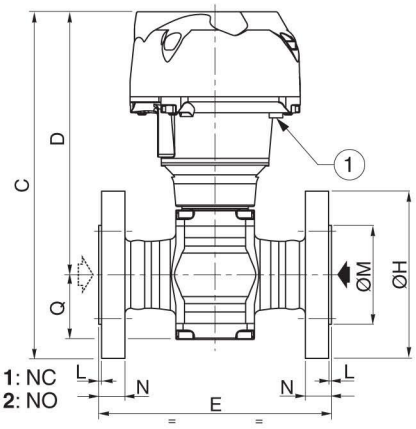

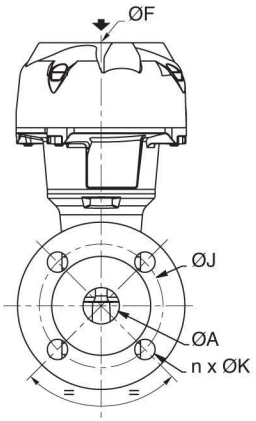

DN 50 - ANSI

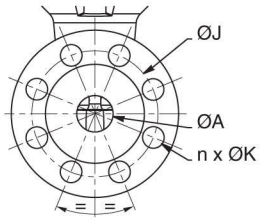

TOP VIEW

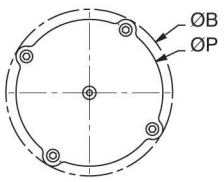

(1) Optical position indicator

type	DN	operator diameter	ØA	ØB	C		D	E		ØF	
					DIN	ANSI		DIN	ANSI	DIN	ANSI
01	15	80	15	110	199,1		151,6	130	140	G 1/8	NPT 1/8
02	20	100	20	132,5	223,4	230,9	170,9	150		G 1/8	NPT 1/8
	25	100	25	132,5	238,4	243,4	180,9	160	170	G 1/8	NPT 1/8
03	32	150	32	191	307,2	304,7	237,2	180	190	G* 1/4	NPT 1/4
	40	150	40	191	334,2	336,7	259,2	200		G* 1/4	NPT 1/4
04	50	200	50	247	411		328,5	230		G* 1/4	NPT 1/4

type	DN	operator diameter	ØH		ØJ		n x ØK		L		ØM		N		ØP	Q
			DIN	ANSI	DIN	ANSI	DIN	ANSI	DIN	ANSI	DIN	ANSI	DIN	ANSI		
01	15	80	95		65	66,5	4 x 14	4 x 16	2	1,6	45	35	16	14,2	95	32,5
02	20	100	105	120	75	82,5	4 x 14	4 x 19	2	1,6	58	43	18	15,8	117	39
	25	100	115	125	85	89	4 x 14	4 x 19	2	1,6	68	51	18	17,5	117	44,5
03	32	150	140	135	100	98,5	4 x 18	4 x 19	2	1,6	78	64	18	19,1	172,5	54
	40	150	150	155	110	114,5	4 x 18	4 x 22	2	1,6	88	73	18	20,6	172,5	66,5
04	50	200	165		125	127	4 x 18	8 x 19	2	1,6	102	92	20	22,4	230	80,5

type	DN	operator diameter	weight			
			DIN		ANSI	
			NC	NO	NC	NO
01	15	80	3,3	3,3	3,2	3,2
02	20	100	5,6	5,6	5,9	5,9
	25	100	6,8	6,7	7,2	7,1
03	32	150	13,2	13,2	13,2	13,3
	40	150	16,4	16,4	17,2	17,2
04	50	200	30,5	28,7	30,8	29

Pneutrol International Limited
UK Office
5 Caulside Drive, Antrim, BT41 2DU
United Kingdom
TEL: +44 (0) 289448 1808
www.valves-direct.com

sales@pneutrol.com
European Office
Unit 6, Saint Anthony's Business Park, Ballymount Road, D22 VW95
Ireland
TEL: +353 (0) 1 4373653
www.valves-direct.com

01189GB-2017/R01
Availability, design and specifications are subject to change without notice. All rights reserved.