PROPORTIONAL VALVES
SENTRONIC
with integrated control electronics

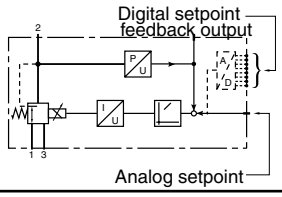

3 Ports
Series
833-354

GENERAL

Fluids		: Air or neutral gas, filtered at 50 µm, condensate-free, lubricated or unlubricated
Ports		: G1/8 - G1/4 - G1/2 - G1
Maximum allowable pressure (MAP)		: See table below
Control range		: See table below
Temperatur	**fluid**	: 0 °C to 60 °C
	ambient	: 0 °C to 40 °C
Setpoint	**- analog**	: 0 - 10 V (impedance 100 KΩ) 0 - 20 mA (impedance 500 Ω) 4 - 20 mA (impedance 500 Ω)
	- digital (option)	: 8 bits + memory function (Hold) 8 bits + pressure reset (Enable)
Hysteresis		: 1 % of span
Linearity / pressure measurement		: ± 0,5 % of span
Repeatability		: ± 0,5 % of span

CONSTRUCTION
Direct operated poppet valve
Body: See table below
Internal parts: Stainless steel and brass
Seal materials: FPM and NBR

ASSEMBLY POSITION
any

ELECTRICAL CHARACTERISTICS

nominal diameter DN (mm)	voltage *	max. power (W)	max. current (mA)	insulation class	degree of protection	electrical connection
3 6 12 20	24 V = +/-10%	12 24 34 44	500 1000 1400 1800	F	IP 65	7-pin connector (16-pin digital) DIN 43651

* Max. ripple: 10 %

SPECIFICATIONS

Ø connection	Ø orifice DN (mm)	flow: K_v coefficient (Nm^3/h)	flow: at 6 bar (l/min - ANR)
G 1/8	3	0,18	210
G 1/4	6	0,60	700
G 1/2	12	1,20	1400
G 1	20	4,80	5600

CATALOGUE NUMBER

8 3 3 - 3 5 4 A S I D P P

A: VERSION (ports), body

0 =	DN6	(G 1/4), Alu	6 =	DN20	(NPT 1"), Alu
1 =	DN12	(G 1/2), Alu[3]	7 =	DN3	(G 1/8), brass
2 =	DN20	(G 1), Alu	8 =	DN6	(G 1/4), brass
3 =	DN6	(ISO 1), Alu	9 =	DN3	(NPT 1/8"), brass
4 =	DN6	(NPT 1/4"), Alu	A =	DN6	(NPT 1/4"), brass
5 =	DN12	(NPT 1/2"), Alu	C =	DN6	(G 1/4), VA
			H =	DN6	(G 1/4), brass[2]

S: SETPOINT
0 = 0 ... 10 V
1 = 0 ... 20 mA
2 = 4 ... 20 mA
3 = Digital input 8 bits with HOLD, 24V level[1]
4 = Digital input 8 bits with pressure reset[1]

I: FEEDBACK
0 = WITHOUT
1 = Feedback output 0 ... 10 V
2 = Feedback output 0 ... 20 mA[1]
3 = Feedback output 4 ... 20 mA[1]
4 = Feedback input 0 ... 10 V
5 = Feedback input 0 ... 20 mA
6 = Feedback input 4 ... 20 mA

PP: PRESSURE RANGE

Relative pressure	Max. inlet pressure (bar)
40 = 0 - 100 mbar	2
50 = 0 - 500 mbar	2
60 = 0 - 1 bar	2
02 = 0 - 2 bar	3
03 = 0 - 3 bar	8
05 = 0 - 5 bar	8
06 = 0 - 6 bar	12
10 = 0 - 10 bar	12
12 = 0 - 12 bar	14
16 = 0 - 16 bar[4]	18
20 = 0 - 20 bar[4]	22
3H = 0 - 30 bar[5]	40
5H = 0 - 50 bar[5]	60

[4] Only for DN3 and DN6
[5] Only for DN6, brass

Vacuum (relative)
V1 = 0 ... -1 bar shut-off valve
V2 = 0 ... -1 bar bypass version

D: PRESSURE SWITCH
0 = WITHOUT
1 = ± 5 %, PNP, feedback=setpoint

Note:
[1] Only one option possible (G1/8), max. 2 options possible (G 1/4 ... G 1)
[2] Only for pressure ranges from 30 to 50 bar
[3] Up to max. 10 bar
Other versions on request

Pneutrol International Limited
UK Office
5 Caulside Drive, Antrim, BT41 2DU
United Kingdom
TEL: +44 (0) 289448 1808
www.valves-direct.com

sales@pneutrol.com
European Office
Unit 6, Saint Anthony's Business Park, Ballymount Road, D22 VW95
Ireland
TEL: +353 (0) 1 4373653
www.valves-direct.com

DIMENSIONS (mm), **WEIGHT** (kg)

G 1/8

Weight: 0,650 kg

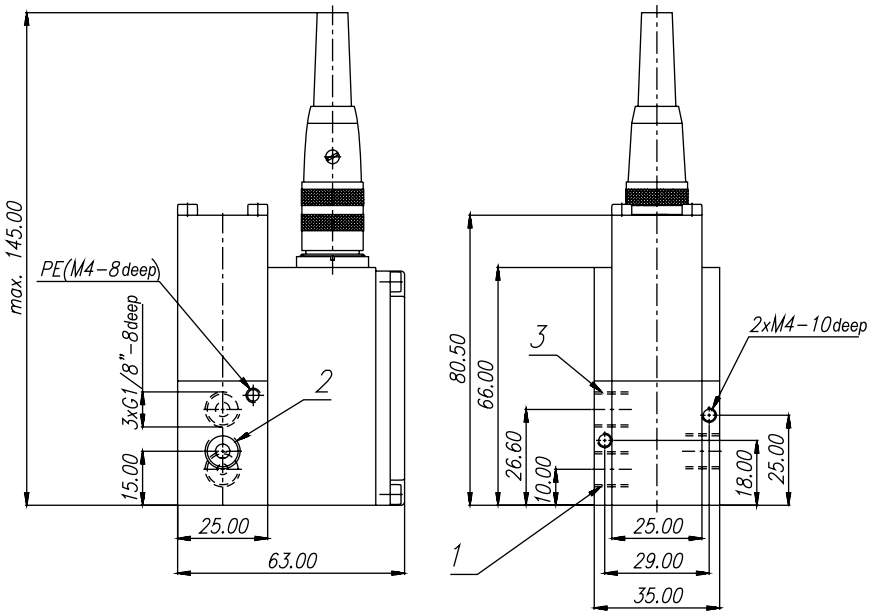

G 1/4

Weight: 0,950 kg

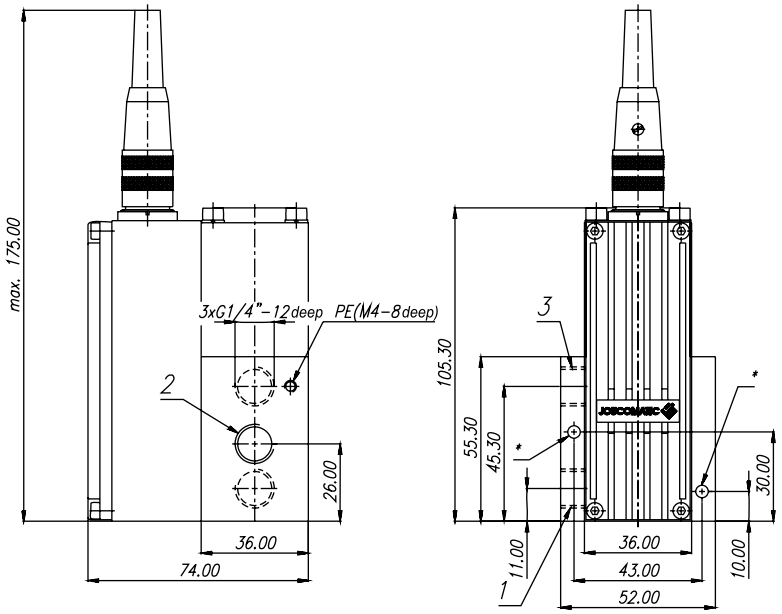

* Thread M6 - depth 10 (on opposite side); tapped through-hole for M4 screw.

G 1/2

Weight: 1,900 kg

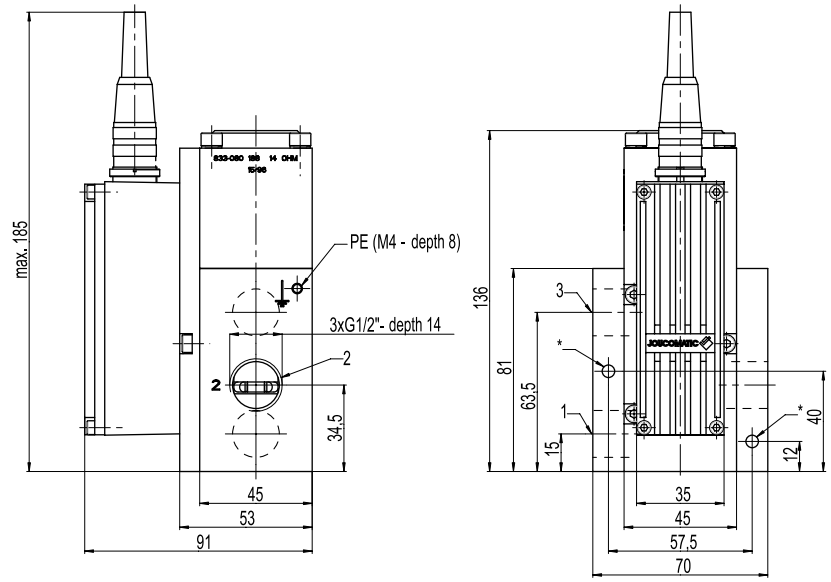

* Thread M6 - depth 10 (on opposite side); tapped through-hole for M4 screw.

DIMENSIONS (mm), WEIGHT (kg)

G 1

Weight: 3,900 kg

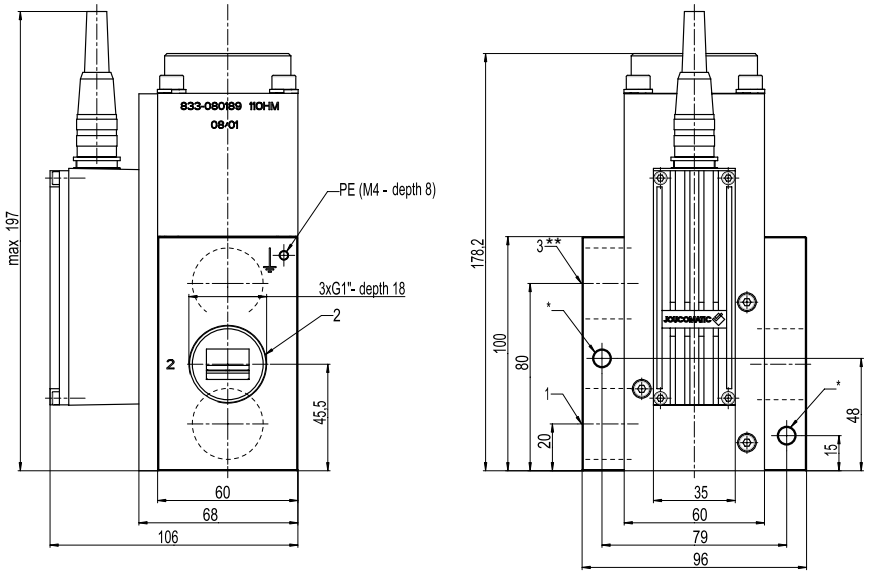

* Thread M8 - depth 15 (on opposite side); tapped through-hole for M6 screw.

** The exhaust connection on the 0-16 bar version is at the bottom of the valve.

CONNECTOR WIRING

Version: **Analog** setpoint

View on solder side of female connector

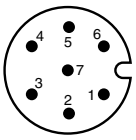

1 - + 24V
2 - GND (24 V)
3 - Setpoint
4 - GND (setpoint)
5 - Output voltage stabilised 12 V (max. 30 mA)
6 - Feedback output pressure - max. 10 mA (option)
Feedback input for external electrical pressure sensor (option)
7 - Pressure switch output (option)
Pin 2 must be connected to ground.

Version: **Digital** setpoint

View on solder side of female connector

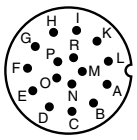

A - +24V
B - GND
C - Bit 0 (LSB)
D - Bit 1
4 - Bit 2
F - Bit 3
G - Bit 4
H - Bit 5
I - Bit 6
K - Bit 7 (MSB)

L - Memory function (Hold)
Pressure reset (Enable)
M - Pressure switch output (option)
P - Feedback output pressure 0 - 10 V (option)
Feedback input for external electrical pressure sensor (option)

Availability, design and specifications are subject to change without notice. All rights reserved.

Pneutrol International Limited
UK Office
5 Caulside Drive, Antrim, BT41 2DU
United Kingdom
TEL: +44 (0) 289448 1808
www.valves-direct.com

sales@pneutrol.com
European Office
Unit 6, Saint Anthony's Business Park, Ballymount Road, D22 VW95
Ireland
TEL: +353 (0) 1 4373653
www.valves-direct.com

Pneutrol International Limited
UK Office
5 Caulside Drive, Antrim, BT41 2DU
United Kingdom
TEL: +44 (0) 289448 1808
www.valves-direct.com

sales@pneutrol.com
European Office
Unit 6, Saint Anthony's Business Park, Ballymount Road, D22 VW95
Ireland
TEL: +353 (0) 1 4373653
www.valves-direct.com