Subbase, Series DO35

- Compressed air connection output G 1/8
- Can be assembled into blocks
- Single base plate principle

Working pressure min./max.	1 ... 10 bar
Ambient temperature min./max.	50 °C
Medium	Compressed air
Grid dimension	34 mm
Direction of pneumatic port (2,4)	On the side
Mounting screw	with hexagon socket
Weight	See table below

Technical data

Part No.	Type	Compressed air connection Input [1]	Compressed air connection Output [2 / 4]
1825503369	Single subbase	G 1/8	G 1/8
1825503370	Manifold subbase	G 1/8	G 1/8

Part No.	Weight	Fig.
1825503369	0.057 kg	Fig. 1
1825503370	0.125 kg	Fig. 2

Scope of delivery incl. seal and mounting screws

Technical information

The min. control pressure must be adhered to, since otherwise faulty switching and valve failure may result!
The pressure dew point must be at least 15 °C under ambient and medium temperature and may not exceed 3 °C .
The oil content of compressed air must remain constant during the life cycle.
Use only the approved oils from AVENTICS. Further information can be found in the “Technical information” document (available in the MediaCentre).

Technical information

Material	
Base plate	Die-cast aluminum
Seal	Acrylonitrile butadiene rubber

Pneutrol International Limited
UK Office
5 Caulside Drive, Antrim, BT41 2DU
United Kingdom
TEL: +44 (0) 289448 1808
www.valves-direct.com

sales@pneutrol.com
European Office
Unit 13C, Duleek Business Park, Duleek, Co.Meath, A92 VP84
Ireland
TEL: +353 41 974 2104
www.valves-direct.com

Dimensions

Fig. 1

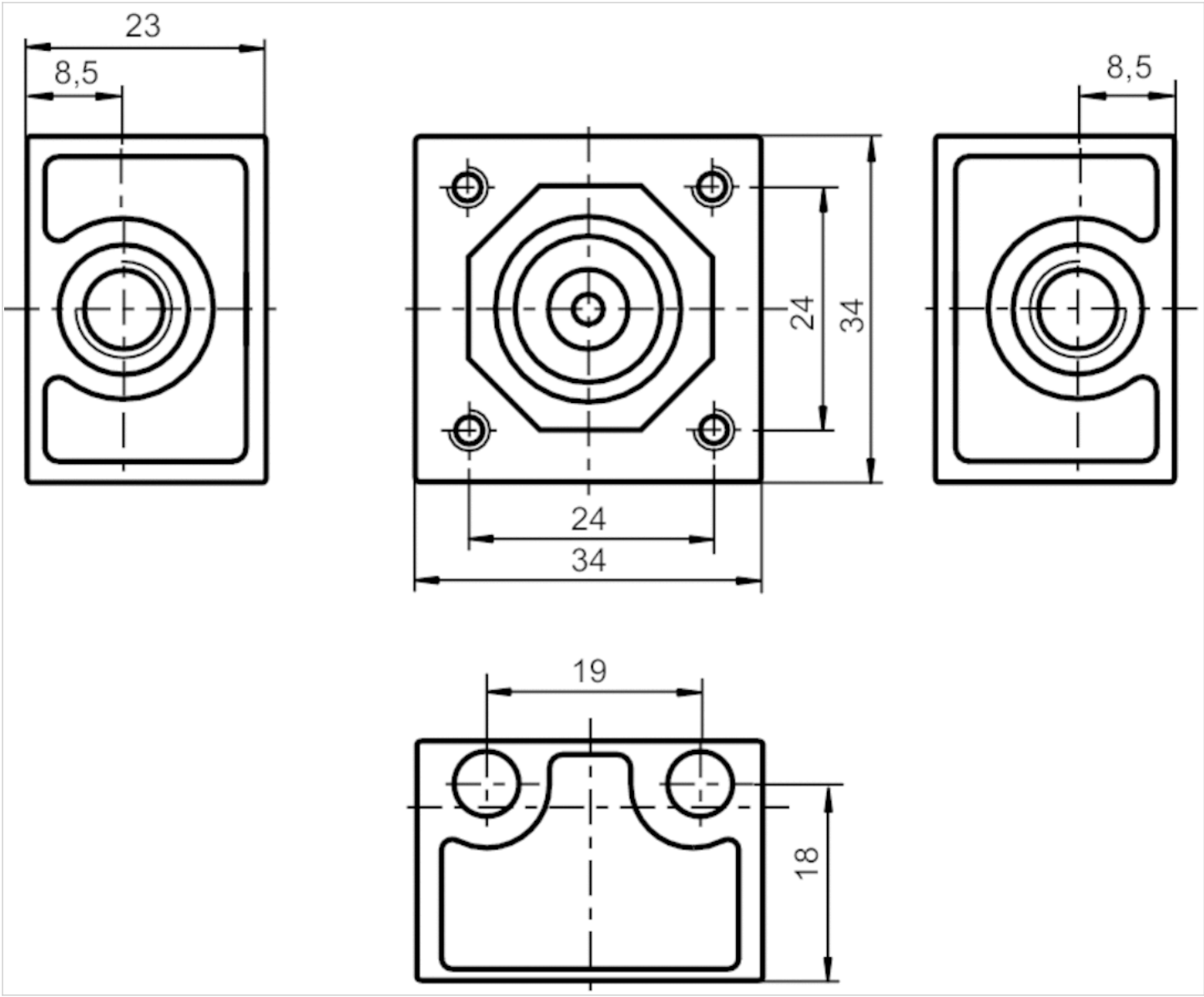

VALVES DIRECT AVENTICS

Pneutrol International Limited
UK Office
5 Caulside Drive, Antrim, BT41 2DU
United Kingdom
TEL: +44 (0) 289448 1808
www.valves-direct.com

sales@pneutrol.com
European Office
Unit 13C, Duleek Business Park, Duleek, Co.Meath, A92 VP84
Ireland
TEL: +353 41 974 2104
www.valves-direct.com

Fig. 2

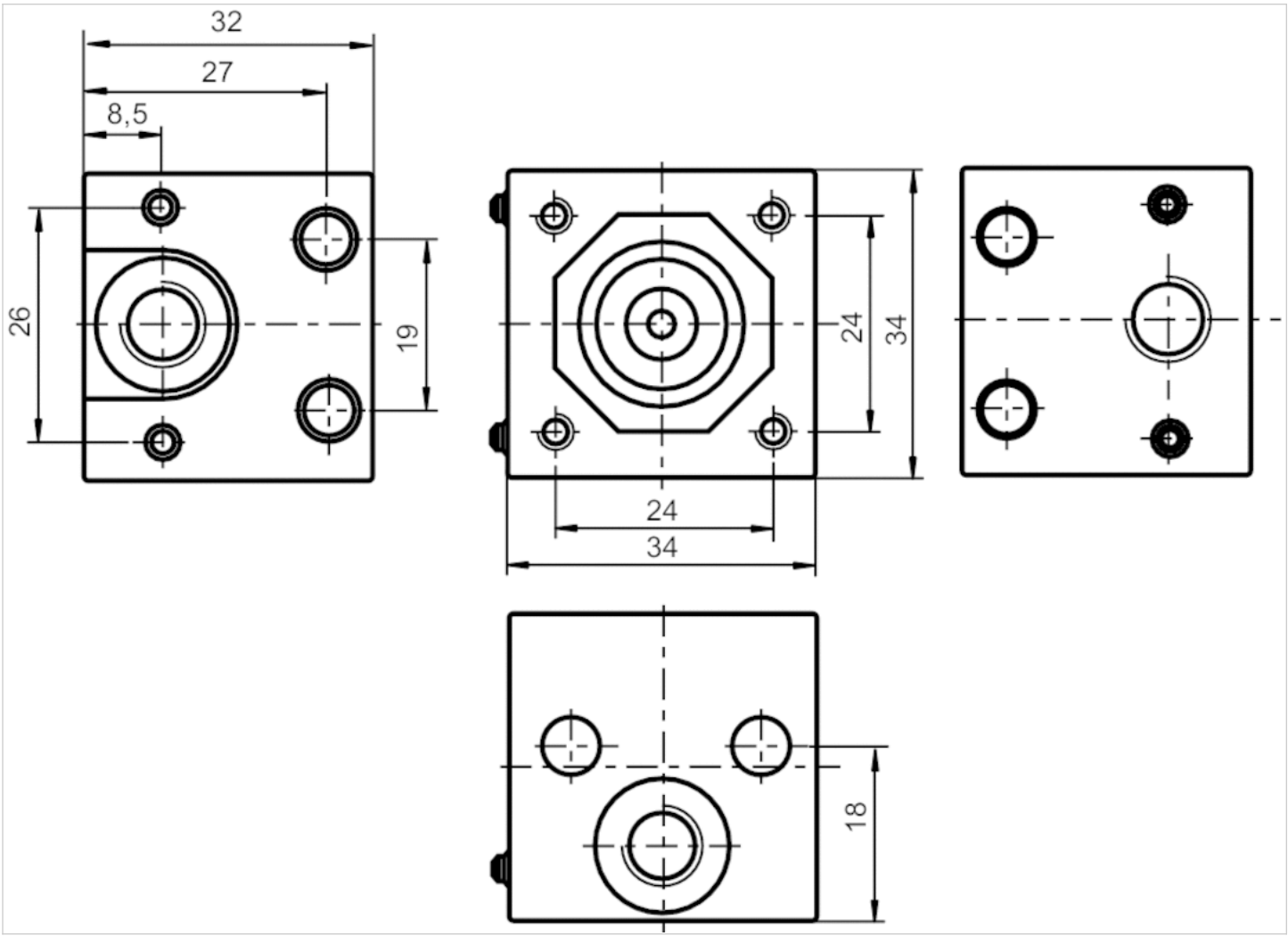

VALVES DIRECT AVENTICS

Pneutrol International Limited
UK Office
5 Caulside Drive, Antrim, BT41 2DU
United Kingdom
TEL: +44 (0) 289448 1808
www.valves-direct.com

sales@pneutrol.com
European Office
Unit 13C, Duleek Business Park, Duleek, Co.Meath, A92 VP84
Ireland
TEL: +353 41 974 2104
www.valves-direct.com