SOLENOID VALVES

proportional direct operated
for vapour recovery regulating applications
1/4

NC

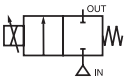

2/2
Series
291

FEATURES

- *The proportional solenoid valves can handle a variable flow of fuel vapour, proportional to the control signal*
- *The high quality FPM disc core construction guarantees a long operating life and a wide temperature range*
- *Explosion proof operator, intended for use in potentially explosive areas, according to Directive ATEX 94/9/EC*
- *Easy electrical installation by means of the moulded-in supply cable, standard length of 2 meter*
- *ASCO Numatics components satisfy all relevant EC directives*

GENERAL

Differential pressure 0 - 1 bar [1 bar = 100kPa]
Ambient temperature range -40 to +65°C

fluids (∗)	temperature range (TS)	seal materials (∗)
Fuel vapour	-40 to +65°C	FPM (fluoroelastomer)

MATERIALS IN CONTACT WITH FLUID

(∗) Ensure that the compatibility of the fluids in contact with the materials is verified

Body	Brass
Core tube	Stainless steel
Core and plugnut	Stainless steel
Core disc seal	FPM
Rider ring	PFTE
Springs	Stainless steel
Lip seal	PFTE
Seat	Brass
Breaker piece	Stainless steel

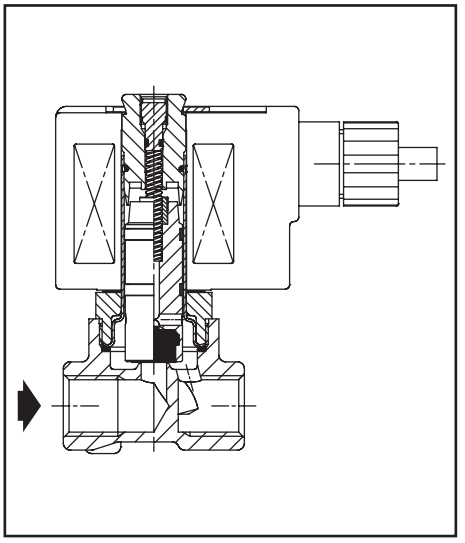

ELECTRICAL CHARACTERISTICS

Coil insulation class F
Electrical safety IEC 335
Standard voltages DC (=) 24V - 48V

prefix option	power ratings holding ~ (W)	power ratings hot/cold = (W)	operator ambient temperature range (TS) (C°)	safety code	electrical enclosure protection (EN 60529)	replacement coil ~ 230V/50/60 Hz	replacement coil = 24V/DC	type [1]
PV	-	9,0 / 11,2	-40 to +65	II 2 G Ex mb II T4	moulded IP67	-	[2]	01
SC	-	9,0 / 11,2	-40 to +55	EN 60730	moulded IP65	-	400425-142	02

(1) Refer to the dimensional drawings on page 18
(2) Multiple coils kits available under ATEX, contact us
\- Not available

SPECIFICATIONS

pipe size	orifice size	flow coefficient Kv		operating pressure differential (bar) min	operating pressure differential (bar) max. PS	prefix optional solenoids * NEMA 7&9	ATEX / IECEx Ex d	ATEX / IECEx Ex e mb	ATEX / IECEx Ex mb	ATEX / IECEx EEx nA	IP65	basic catalogue number
G	(mm)	(m³/h)	(l/min)		=	EF	NF	EM	PV	ZN	SC	
NC - Normally closed												
1/4	5,6	0,73	12,2	0	1	-	-	-	●	-	●	**G291A210**

● Available feature
\- Not available
* For description of solenoids see pages 31-40

X020GB-2009/R0 - X020-04-010
Availability, design and specifications are subject to change without notice. All rights reserved.

Pneutrol International Limited
UK Office
5 Caulside Drive, Antrim, BT41 2DU
United Kingdom
TEL: +44 (0) 289448 1808
www.valves-direct.com

sales@pneutrol.com
European Office
Unit 6, Saint Anthony's Business Park, Ballymount Road, D22 VW95
Ireland
TEL: +353 (0) 1 4373653
www.valves-direct.com

ADDITIONAL OPTIONS

- Other explosionproof enclosures for use in zone 1/21-2/22, categories 2-3 to ATEX Directive 94/9/EC
- Explosionproof and watertight solenoids according to "**NEMA**" standards

INSTALLATION

- The valves can be mounted in any position without affecting operation.
- Pipe connection identifiers: G = pipe thread according to ISO 228/1
- Installation/maintenance instructions are included with each valve.
- PV solenoids have a standard cable length of 2 meters. Other lengths in full meters are available on request

DIMENSIONS (mm), WEIGHT (kg)

TYPE 01
Prefix "PV" Solenoid
Epoxy encapsulated
EN-IEC 60079-0, 60079-18, 61241-0, 61241-18
II 2 G/D Ex mb II / Ex mD
IP67

G291A210

TYPE 02
Prefix "SC" Solenoid
Epoxy moulded
IEC 335 / ISO 4400
IP65

G291A210

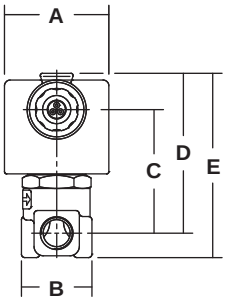

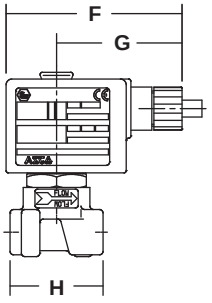

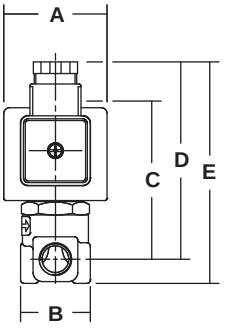

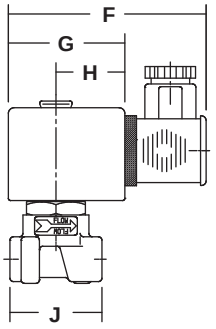

type	AC/DC	prefix option	catalogue number	spare parts kits	A	B	C	D	E	F	G	H	J	weight
01	=	PV	G291A210	PVC117692	45	30	53	68	79	75	54	40	-	0,45 Kg
02	=	SC	G291A210	C117692	45	30	68	85	95	85	50	30	40	0,35 Kg

X020GB-2009/R0 - X020-04-010
Availability, design and specifications are subject to change without notice. All rights reserved.

Pneutrol International Limited
UK Office
5 Caulside Drive, Antrim, BT41 2DU
United Kingdom
TEL: +44 (0) 289448 1808
www.valves-direct.com

sales@pneutrol.com
European Office
Unit 6, Saint Anthony's Business Park, Ballymount Road, D22 VW95
Ireland
TEL: +353 (0) 1 4373653
www.valves-direct.com