SOLENOID VALVES

direct operated

1/8 - 1/4

NC

U

NO

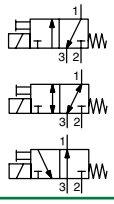

3/2
Series
356

FEATURES

- *Compact design for the control of single-acting actuators or filling and draining cycles*
- *Wide range of flow and pressure ratings*
- *Quick disassembly of core tube for easy maintenance of internal parts*
- *Standard disc seal made of FPM suitable for a wide range of operating temperatures and compatible with many fluids*
- *Standard manual operator allows an easy installation*
- *AC/DC interchangeability of the solenoid without disassembly of the valve*
- *Compliance with UL and CSA standards (coil 4/6,9 W)*
- *Compact and low weight valve*
- *The solenoid valves satisfy all relevant EC directives*

GENERAL

Differential pressure See «SPECIFICATIONS» [1 bar =100 kPa]
Maximum viscosity 40 cSt (mm²/s)
Response time 5 - 10 ms

fluids (✳)	temperature range (TS)	seal materials (✳)
air, inert gas, water, oil	-10°C to +100°C	FPM (fluoroelastomer)

MATERIALS IN CONTACT WITH FLUID

(✳) Ensure that the compatibility of the fluids in contact with the materials is verified

	Brass body	Stainless steel body
Body	Brass	AISI 316
Core tube	Stainless steel	Stainless steel
Core and plugnut	Stainless steel	Stainless steel
Springs	Stainless steel	Stainless steel
Seat	Brass	Stainless steel
Seals	FPM	FPM
Disc	FPM	FPM
Shading coil	Copper	Copper

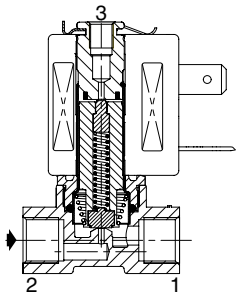

NC function

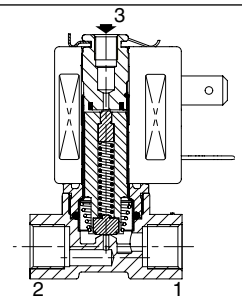

NO function

ELECTRICAL CHARACTERISTICS

Coil insulation class F
Connector Spade plug (cable Ø 6-8 mm or Ø 6-10 mm)
Connector specification DIN 43650, 11 mm, industry standard B (type 01) or ISO 4400 / EN 175301-803, form A (type 02)
Electrical safety IEC 335
Electrical enclosure protection Moulded IP65 (EN 60529)
Standard voltages DC (=) : 24V - 48V
(Other voltages and 60 Hz on request) AC (~) : 24V - 48V - 115V - 230V / 50 Hz

prefix option	power ratings: inrush ~	holding ~		hot/cold =	operator ambient temperature range (TS)	replacement coil ~	replacement coil =	type [1]
	(VA)	(VA)	(W)	(W)	(C°)	230 V/50 Hz	24 V DC	
SC	12	6	4	5 / 6,9	-10 to +60	400127-197	400127-142	01
	15	7	5	5 / 6,9	-10 to +60	400727-117	400727-185	02

[1] Refer to the dimensional drawings on the following page.

SPECIFICATIONS

pipe size	orifice size	flow coefficient Kv 2→1		3→1		operating pressure differential (bar) min.	max. (PS) air, water, oil (✳)		power coil (W)		catalogue number brass	catalogue number stainless steel	options EPDM		
G	(mm)	(m³/h)	(l/min)	(m³/h)	(l/min)		~	=	~	=	~/=	~/=			
NC - Normally closed															
1/8 [2]	1,2	0,05	0,8	0,05	0,8	0	15	15	4	6,9	**SCG356B001VMS**	**SCG356B013VMS**	E	-	-
	1,6	0,08	1,33	0,05	0,8	0	10	10	4	6,9	**SCG356B002VMS**	**SCG356B014VMS**	E	-	-
	2,0	0,1	1,66	0,05	0,8	0	5	5	4	6,9	**SCG356B003VMS**	**SCG356B015VMS**	E	-	-
	2,4	0,13	2,1	0,05	0,8	0	4	4	4	6,9	**SCG356B004VMS**	**SCG356B016VMS**	E	-	-
1/4 [2]	1,6	0,08	1,33	0,05	0,8	0	10	10	5	6,9	**SCG356B466VMS**	**SCG356B434VMS**	-	-	-
	2,4	0,16	2,67	0,05	0,8	0	4	4	5	6,9	**SCG356B470VMS**	**SCG356B436VMS**	-	-	-
U - Universal															
1/8 [2]	1,6	0,06	1	0,05	0,8	0	4,5	4,5	4	6,9	**SCG356B010VMS**	**SCG356B022VMS**	E	-	-
	2,0	0,08	1,33	0,05	0,8	0	3	3	4	6,9	**SCG356B011VMS**	**SCG356B023VMS**	E	-	-
	2,4	0,09	1,5	0,05	0,8	0	2	2	4	6,9	**SCG356B012VMS**	**SCG356B024VMS**	E	-	-
NO - Normally open															
1/8 [2]	1,6	0,096	1,6	0,05	0,8	0	8,5	8,5	4	6,9	**SCG356B006VMS**	**SCG356B018VMS**	E	-	-

[2] Pipe size port 3: M5 (Orifice size = 1,2 mm).

E

00067GB-2013R01
Availability, design and specifications are subject to change without notice. All rights reserved.

Pneutrol International Limited
UK Office
5 Caulside Drive, Antrim, BT41 2DU
United Kingdom
TEL: +44 (0) 289448 1808
www.valves-direct.com

sales@pneutrol.com
European Office
Unit 6, Saint Anthony's Business Park, Ballymount Road, D22 VW95
Ireland
TEL: +353 (0) 1 4373653
www.valves-direct.com

OPTIONS

- Valves can also be supplied with EPDM (ethylene-propylene) seals and discs. Use the appropriate optional suffix letter for identification (1/8 version only)
- Explosionproof enclosures for use in zones 1/21-2/22, categories 2-3 to ATEX Directive 94/9/EC (see “Explosionproof solenoids” section)
- Flying leads coil, use prefix L (e.g.: LG356B001VMS) (4 W/6,9 W coil only)
- Oxygen service with seals and disc in FPM, suffix NV, example: SCG356B001NVMS
- Solenoid valves integrated on manifold, orifice sizes 1,2 - 1,6 - 2 - 2,4 mm (See V591)
- French sanitary conformity approval ACS for potable water applications, suffix: FW (1/8 NC only)
- Without manual operator, on request
- Other pipe connections are available on request
- Plug with visual indication and peak voltage suppression or with cable length of 2 m (see Solenoids, Coils & Accessories section)

INSTALLATION

- The solenoid valves can be mounted in any position without affecting operation
- Solenoid valves have 2 mounting holes in body
- Pipe connection identifier is G = G (ISO 228/1)
- Installation/maintenance instructions are included with each valve

ORDERING EXAMPLES:

SC	G	356 **B** 001	**VMS**	230V / 50 Hz
SC	G	356 **B** 002	**EMS**	115V / 50 Hz
SC	G	356 **B** 014	**NVMS**	24V / DC
SC	G	356 **B** 001	**FWMS**	24V / DC
SC	G	356 **B** 456	**VMS**	230V / 50 Hz
SC	G	356 **B** 006	**VMS**	230V / 50 Hz

prefix — pipe thread — basic number — suffix — voltage

DIMENSIONS (mm), WEIGHT (kg)

TYPE 01

Prefix “SC” Solenoid
Epoxy moulded
IEC 335 / DIN 43650
IP65

NC/NO/U (1/8): All 1/8 catalogue numbers

TYPE 02

Prefix “SC” Solenoid
Epoxy moulded
IEC 335 / ISO 4400
IP65

NC (1/4): SCG356B434VMS/436VMS/466VMS/470VMS/471V/472V

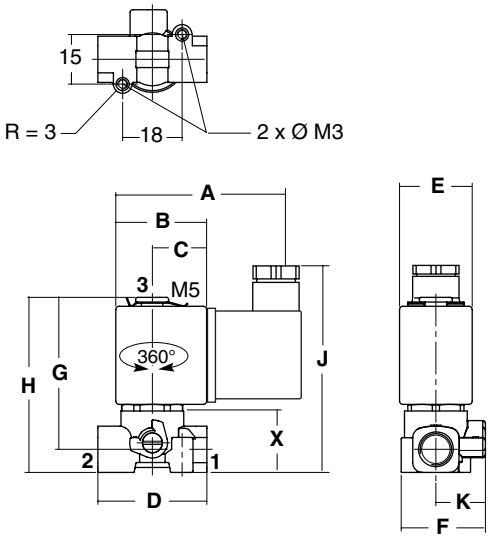

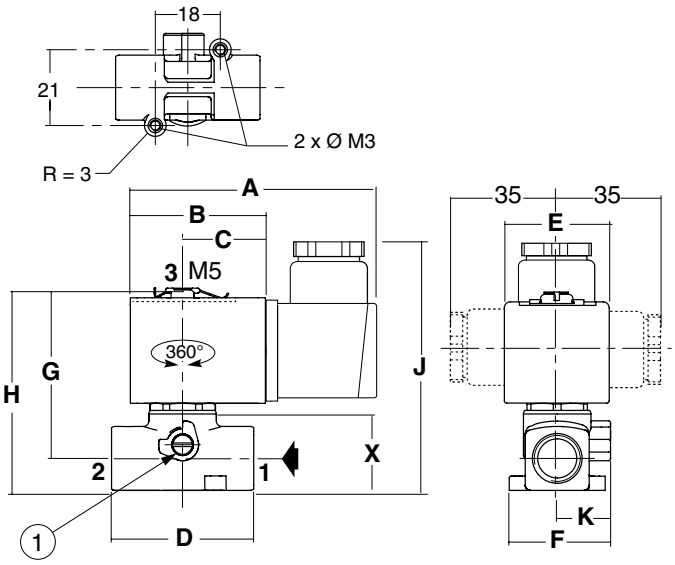

type	prefix option	pipe size	A	B	C	D	E	F	G	H	J	K	X	weight (1) brass	weight (1) stainless steel
01	SC	1/8	60,5	27,5	16,5	33	22	25,5	46	53	69	15	18,6	0,156	0,138
02	SC	1/4	76	38	23,3	40	29,7	28,5	48	57	79	15	23.4	0,232	0,229

(1) including coil and connector.

00067GB-2013/R01
Availability, design and specifications are subject to change without notice. All rights reserved.

Pneutrol International Limited
UK Office
5 Caulside Drive, Antrim, BT41 2DU
United Kingdom
TEL: +44 (0) 289448 1808
www.valves-direct.com

sales@pneutrol.com
European Office
Unit 6, Saint Anthony’s Business Park, Ballymount Road, D22 VW95
Ireland
TEL: +353 (0) 1 4373653
www.valves-direct.com