SPOOL VALVES
air operated
G 1/4-G 3/8-G 1/2 tapped body

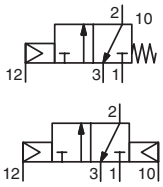

3/2
Series
551-552-553

FEATURES
- *The valve offers full environmental protection against the ingress of liquids, dusts and other foreign matter (environmentally protected construction).*
- *Version can be installed in all sensitive zones (white rooms, etc..)*

GENERAL

Fluid	Air or neutral gas, filtered, lubricated or not
Operating pressure	0 to 10 bar
Pilot pressure	2 to 10 bar
Ambient temperature	-25°C to +60°C
Flow (Qv at 6 bar)	See "specifications"

CONSTRUCTION

Body	Black anodized aluminium
Internal parts	Zinc diecasting, steel, POM (polyacetal), aluminium
Seals	NBR (nitrile) and PUR (polyurethane)

SPECIFICATIONS

symbol function	operator pilot (12)	operator return (10)	pipe size	flow at 6 bar l/min (ANR)	flow Kv coef.	catalogue number
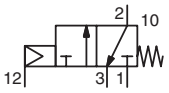	Air operated	Spring	G 1/4	860	12,5	**G551A105**
			G 3/8	3000	41,5	**G552A105**
			G 1/2	3800	52,5	**G553A105**
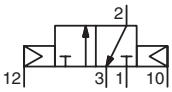	Air operated	Air operated	G 1/4	860	12,5	**G551A106**
			G 3/8	3000	41,5	**G552A106**
			G 1/2	3800	52,5	**G553A106**

These products are available in version 5/2 - see P460
Note: do not connect the pressure supply to the exhaust port 3. For a "distributing" function or use in NO function, consult us.

ACCESSORIES - (identical for 3/2 and 5/2 spool valves)
- Supply rail (1)
  (supplied with seals and banjo bolts, without mounting brackets).
- Set of 2 mounting angle brackets (2) for supply rail,
  catalogue number: **88100049** (series 551) - **88100773** (series 552-553)

supply rail for « n » valves	catalogue number 551	552	553
2	**88100034**	**88100800**	**88100759**
3	**88100035**	**88100801**	**88100760**
4	**88100036**	**88100802**	**88100761**
5	**88100037**	**88100803**	**88100762**
6	**88100038**	**88100804**	**88100763**
7	**88100039**	**88100805**	**88100764**
8	**88100040**	**88100806**	**88100765**

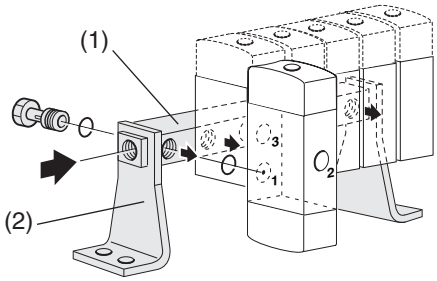

(1) or (3) supply rail
(2) mounting brackets (x2)

- Supply rail with isolation valves (3) with mounting brackets (2)
  allows the isolation of one or more valves from the general pressure supply

supply rail G 1/4 for « n » valves series 551	catalogue number
2	**88100915**
3	**88100916**
4	**88100917**
5	**88100918**
6	**88100919**
7	**88100920**
8	**88100921**

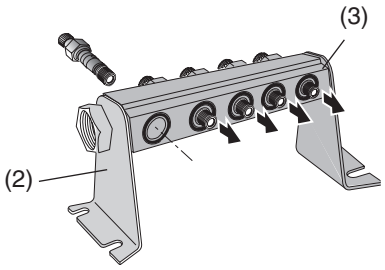

OPTIONS
- Air operated 3/2 NAMUR subbase mounted version (see page P562-2)
- Equipment for use in potentially **explosive atmospheres** caused by dusts or gases (ATEX Directive 94/9/EC)
  Classification Ⓔx *II 2 GD c Ta60°C T85°C (T6)* : **GD** suffix - example: G551A105GD

D

00380GB-2009/R02
Availability, design and specifications are subject to change without notice. All rights reserved.

Pneutrol International Limited
UK Office
5 Caulside Drive, Antrim, BT41 2DU
United Kingdom
TEL: +44 (0) 289448 1808
www.valves-direct.com

sales@pneutrol.com
European Office
Unit 6, Saint Anthony's Business Park, Ballymount Road, D22 VW95
Ireland
TEL: +353 (0) 1 4373653
www.valves-direct.com

DIMENSIONS (mm), WEIGHT (kg)

Series 551

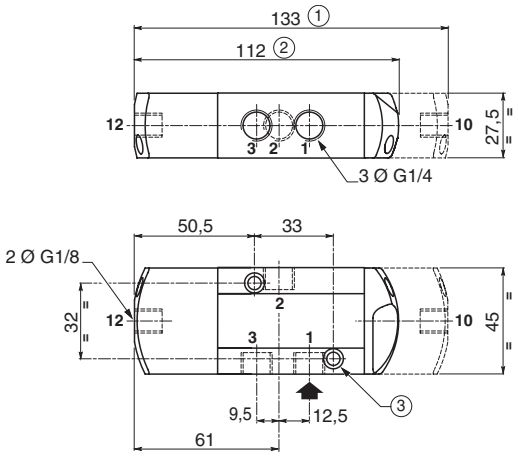

① air return
② spring return
③ 2 fixing holes : Ø 5,3
counterbore : Ø 9, depth 5

series	weight	
	monostable	bistable
551	0,28	0,36

Ports for 3/2 NC
1 = Pressure
2 = Outlet
3 = Exhaust
10 = Return
12 = Pilot

Series 552 - 553

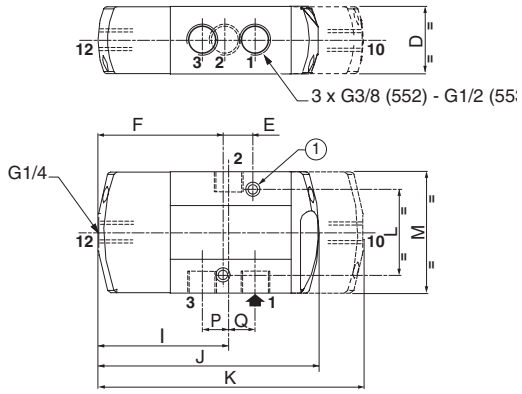

① 2 fixing holes Ø 6,5; counterbore : Ø 11, depth 6 mm
dimension J: spring return
dimension K: air return

series	D	E	F	I	J	K	L	M	P	Q	weight	
											monostable	bistable
552	40,2	16	78,5	**63,7**	134,5	162	51	72,3	12,1	17,4	0,81	1,07
553	40,2	16	78,5	**62,7**	134,5	162	51	72,3	12,1	19,4	0,80	1,06

ASSEMBLY WITH SUPPLY RAIL

Installation without isolation valve

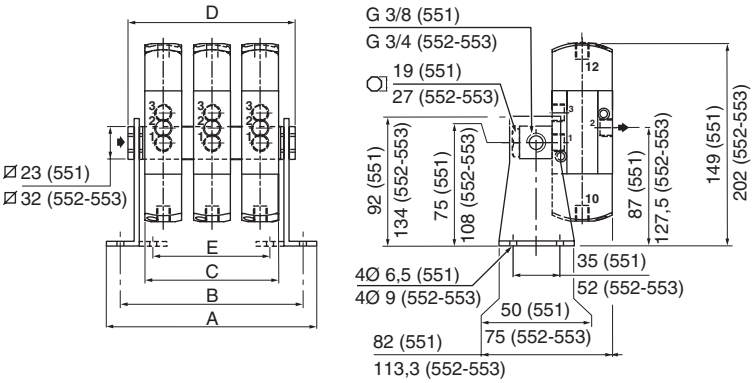

Installation with isolation valve

Supply rail

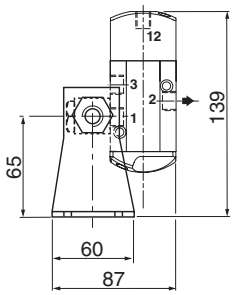

Isolation valve

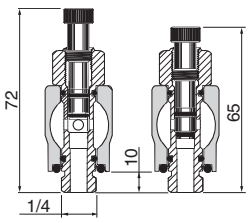

series 551	number of valves						
	2	3	4	5	6	7	8
A	108	136	164	192	220	248	276
B	92	120	148	176	204	232	260
C	55	83	111	139	167	195	223
D	78	106	134	162	190	218	246
E	42	70	98	126	154	182	210
	weight						
monostable	0,9	1,2	1,5	1,9	2,2	2,5	2,8
bistable	1	1,4	1,9	2,3	2,7	3,1	3,5

series 552-553	number of valves						
	2	3	4	5	6	7	8
A	136	177	218	259	300	341	382
B	116	157	198	239	280	321	362
C	81	122	163	204	245	286	327
D	117	158	199	240	281	322	363
E	-	-	-	-	-	-	-
	weight						
monostable	2,3	3,0	3,8	4,7	5,5	6,3	7,2
bistable	2,5	3,5	4,6	5,7	6,7	7,7	8,7

This mounting arrangement allows valves to be mounted in any of 4 positions.

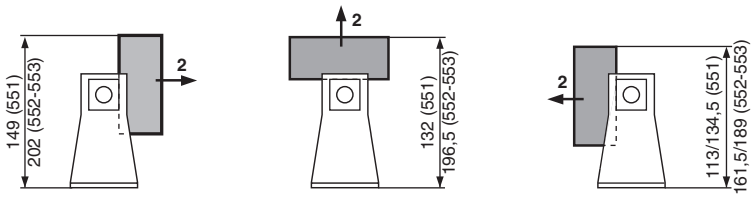

Not possible with supply rail and isolation valves

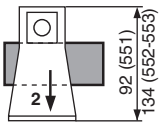

Only with supply rail with isolation valves (**Series 551**)

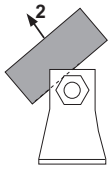

00380GB-2009/R01
Availability, design and specifications are subject to change without notice. All rights reserved.

Pneutrol International Limited
UK Office
5 Caulside Drive, Antrim, BT41 2DU
United Kingdom
TEL: +44 (0) 289448 1808
www.valves-direct.com

sales@pneutrol.com
European Office
Unit 6, Saint Anthony's Business Park, Ballymount Road, D22 VW95
Ireland
TEL: +353 (0) 1 4373653
www.valves-direct.com