numatics

QUICK-ACTING SPOOL & SLEEVE VALVES

solenoid air operated

monostable function, threaded ports NPTF 1/4

5/2
Series
92280

FEATURES

- *Reliability: steel spool & sleeve technlogy with long service life*
- *Switching time of 6 ms.*
- *Suitable for repeatable applications, e.g. demanding gluing applications or in sorting systems*
- *Robust valve design, particularly recommended for use in high-temperature or dirty environments*

GENERAL

Fluids	Air or neutral gas, filtered, lubricated or not
Operating pressure	2,7 to 7 bar
Ambient temperature	-25°C to +90°C
Flow (Qv at 6 bar)	See "SPECIFICATIONS"
Response time	< 6 ms (ON), < 6 ms (OFF)

CONSTRUCTION

Body	Aluminium, anodised, painted grey
Internal parts	Stainless steel, POM (polyacetal), aluminium
Static seals	NBR (nitrile)

INTEGRATED PILOT

Seals	NBR (nitrile)
Electrical equipment	Conforming to VDE 0580
Solenoid coil	Encapsulated

E

ELECTRICAL CHARACTERISTICS

voltage		consumption		insulation class	protection degree	Connector specification
		inrush	hold			
DC =	24V	3,5 W		F	IP 65	size 15, 9,4 mm pin spacing EN 175301-803, industry standard form C

SPECIFICATIONS

function symbol		operators pilot (14) solenoid air operated return (12)	Anschluss	flow		catalogue number
				at 6 bar l/min	Kv m³/h	without connector (1)
5/2	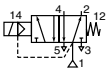	spring return	NPTF 1/4 (Exhaust NPTF 1/8)	500	0,47	**92280-1**

(1) For connectors see page P935-1

OPTIONS (upon request)

- Solenoid coil voltage of 115 VAC.

00642GB-2014/R01
Availability, design and specifications are subject to change without notice. All rights reserved..

Pneutrol International Limited
UK Office
5 Caulside Drive, Antrim, BT41 2DU
United Kingdom
TEL: +44 (0) 289448 1808
www.valves-direct.com

sales@pneutrol.com
European Office
Unit 6, Saint Anthony's Business Park, Ballymount Road, D22 VW95
Ireland
TEL: +353 (0) 1 4373653
www.valves-direct.com

DIMENSIONS (mm), **WEIGHT** (kg)

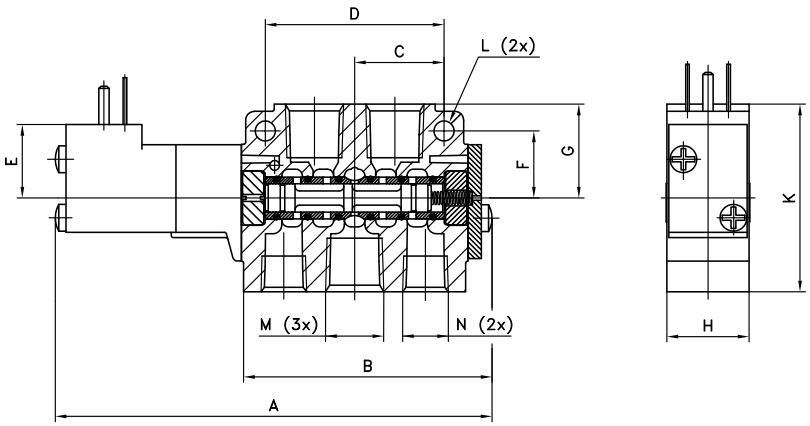

A	B	C	D	E	F	G	H	K	L Ø	M NPTF	N NPTF	weight approx.
97	55,5	20	40	16	15	21	18	42	4,5	1/4	1/8	0,122

00642GB-2011/R01
Availability, design and specifications are subject to change without notice. All rights reserved..

Pneutrol International Limited
UK Office
5 Caulside Drive, Antrim, BT41 2DU
United Kingdom
TEL: +44 (0) 289448 1808
www.valves-direct.com

sales@pneutrol.com
European Office
Unit 6, Saint Anthony's Business Park, Ballymount Road, D22 VW95
Ireland
TEL: +353 (0) 1 4373653
www.valves-direct.com