VALVES

pressure operated
stainless steel body
with socket welding ends PN40, DN 15 to 50

U

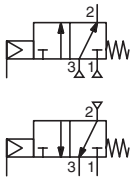

3/2
Series
S398

FEATURES

- *Ruggedly built valve, particularly recommended for use with steam, superheated water, corrosive fluids*
- *High-performance, maintenance-free stuffing box, resistant to thermal shock*
- *Mixer function (two pressure inlets at 1 or 3, one outlet at 2) or distributor function (one pressure inlet at 2, two outlets at 1 and 3)*
- *Vacuum operation up to 10^{-2} mbar*
- *Allowable backpressure: up to 40 bar*
- *Optical position indicator as standard*
- *Autoclavable valve for use at high ambient temperatures (up to 180°C)*
- *The valves satisfy Pressure Equipment Directive 97/23/EC*
- *The valves in conformity with IEC 61508 Standard (2010 route 2_H version) certified with integrity levels: SIL 2 for HFT = 0*

GENERAL

Differential pressure	0 to 40 bar [1 bar =100 kPa]
Maximum allowable pressure	40 bar (within the specified limits, see diagram I)
Ambient temperature range	-25°C to +180°C
Maximum viscosity	5000 cSt (mm^2/s)
Pilot fluid	Air
Max. pilot pressure	10 bar
Min. pilot pressure	See below

fluids (✳)	temperature range	disc seal (✳)
DN 15-20-25: air and gas groups 1 & 2 DN 32-40-50: air and gas group 2 all DN: water, oil, liquids groups 1 & 2 and steam	- 10°C to + 250°C	bronze PTFE

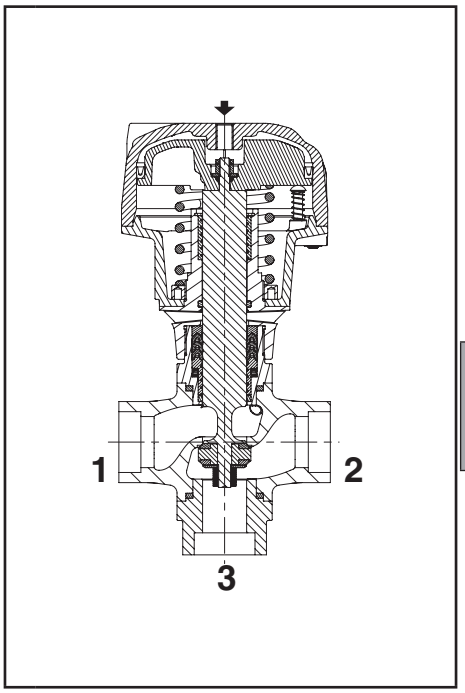

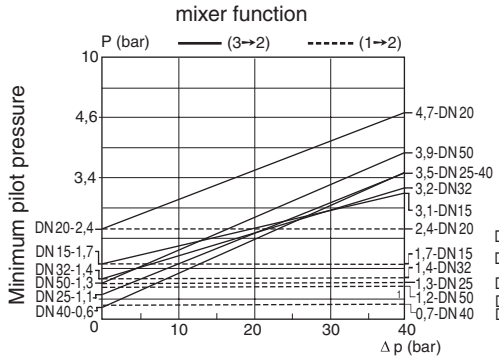

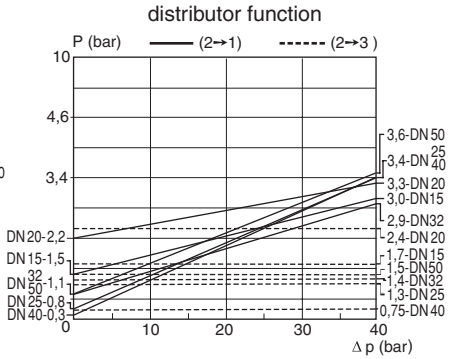

CONSTRUCTION

Socket welding ends	EN 12760

MATERIALS IN CONTACT WITH FLUID

(✳) Ensure that the compatibility of the fluids in contact with the materials is verified

Body and plug	Stainless steel
Stuffing box housing	Stainless steel
Stem, disc	Stainless steel
Stuffing box packing	PTFE chevrons
Disc seal	Bronze PTFE
Valve body seal	Graphite

OTHER MATERIALS

Operator	Aluminium, nickel plated

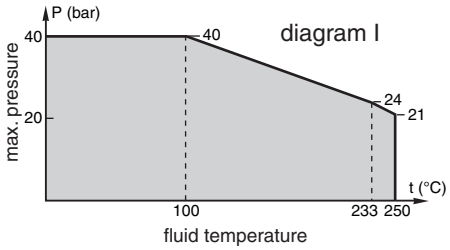

SPECIFICATIONS

DN	ext. pipe diameter	flow coefficient Kv mixer 3→2		mixer 1→2		distributor 2→3		distributor 2→1		pilot pressure (bar)		operating pressure differential	operator diameter	catalogue number
	(mm)	(m^3/h)	(l/min)	(m^3/h)	(l/min)	(m^3/h)	(l/min)	(m^3/h)	(l/min)	min.	max.	(bar)	(mm)	
U - Universal														
15	22,4	3,3	54	4,4	73	3,5	59	4,6	78	❊	10	40	80	**S398A001**
20	27,7	8,0	133	7,4	123	8,1	136	7,7	129	❊	10	40	100	**S398A002**
25	34,5	11,4	190	11,6	194	12,1	203	11,9	199	❊	10	40	100	**S398A003**
32	43,2	18,9	316	16,6	278	17,9	299	16,6	278	❊	10	40	150	**S398A004**
40	49,5	27	450	27	450	27	450	27	450	❊	10	40	150	**S398A005**
50	62	51	850	51	850	51	850	51	850	❊	10	40	200	**S398A006**

❊ Minimum pilot pressure varies with differential pressure. See piloting chart above.

F

00181GB-2014/R02
Availability, design and specifications are subject to change without notice. All rights reserved.

Pneutrol International Limited
UK Office
5 Caulside Drive, Antrim, BT41 2DU
United Kingdom
TEL: +44 (0) 289448 1808
www.valves-direct.com

sales@pneutrol.com
European Office
Unit 6, Saint Anthony's Business Park, Ballymount Road, D22 VW95
Ireland
TEL: +353 (0) 1 4373653
www.valves-direct.com

OPTIONS AND ACCESSORIES

- Metal-to-metal sealing disc
- Signaling box, with mechanical or inductive contacts
- Low ambient temperatures - Temperature range: -50°C to +70°C
- ATEX 94/9/EC versions for potentially explosive atmospheres, categories 2 GD and 3 GD
- 2 switches, Ex d protection, mounted on valve with 2 Crouzet contacts type 83101-I-W1, for use in ambient temperatures from -20°C to +80°C: suffix **SD2** [Contact us for option with 1 Honeywell contact type 1HS1 (-55°C to +82°C) or 1 Crouzet contact (-20°C to +80°C).]
- Valve seat leakage class VI as defined by FCI 70-2, contact us
- Other pipe connections are available on request

INSTALLATION

- The valves can be mounted in any position without affecting operation
- Compatible with ASTM 1, 2 and 3 oils
- Check temperature range of valve body and solenoid pilot valves for suitability. For probability of failure, contact us
- The socket welding ends are according to EN 12760
- Pipe connections (G*) have standard thread according to ISO 228/1 and ISO 7/1. Pipe connections (G) have standard thread according to ISO 228/1
- Installation/maintenance instructions are included with each valve

SPARE PARTS KITS

catalogue number	spare parts kit no.		
	piston seal	actuator spring	stem, disc, seals
S398A001	**C140233**	**C140299**	**C140323**
S398A002	**C140234**	**C140301**	**C140324**
S398A003	**C140234**	**C140303**	**C140325**
S398A004	**C140235**	**C140305**	**C140326**
S398A005	**C140235**	**C140307**	**C140327**
S398A006	**C140298**	**C140309**	**C140328**

ORDERING EXAMPLES:

S 398 **A** 003
S 398 **A** 006

ext. pipe thread
basic number

ORDERING EXAMPLES KITS:

C140233
C140298
C140303

basic number

DIMENSIONS (mm), WEIGHT (kg)

TYPE 01-02-03-04
Prefix "S"

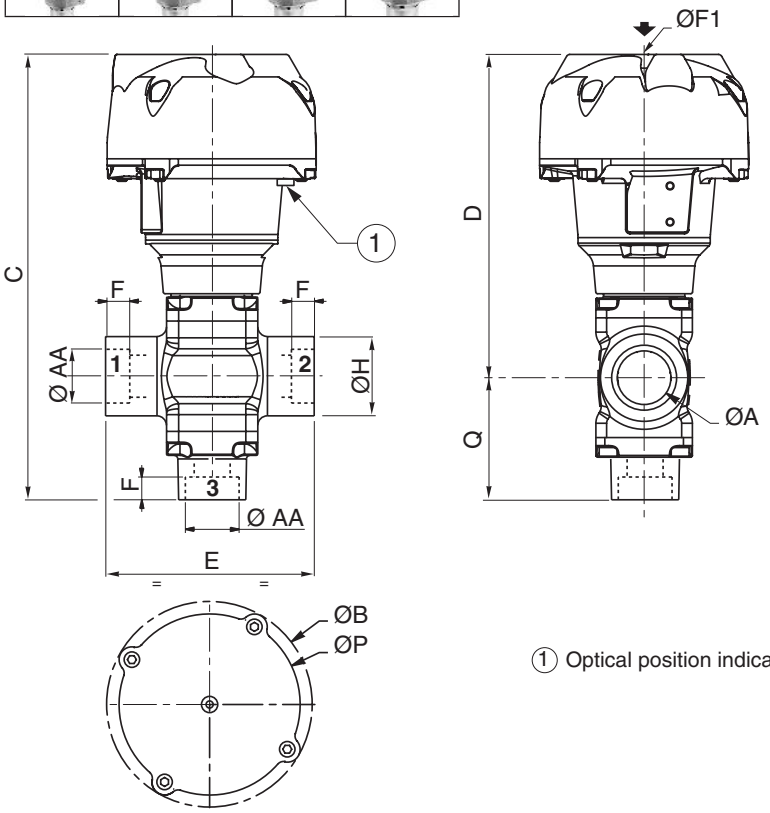

① Optical position indicator

type	DN	operator diameter	ØA	ØAA	ØB	C	D	E	F	ØF1	ØH	ØP	Q	weight
01	15	80	15	22,4	110	203,1	151,6	85	9,5	G 1/8	33	95	51,5	1,87
02	20	100	20	27,7	132,5	229,2	170,9	110	11	G 1/8	40	117	58,3	3,51
	25	100	25	34,5	132,5	244,9	180,9	120	12,5	G 1/8	46	117	64	4,23
03	32	150	32	43,2	191	318,2	237,2	145	14,5	G* 1/4	57	172,5	81	9,37
	40	150	40	49,5	191	361,7	259,2	150	16	G* 1/4	65	172,5	102,5	11,9
04	50	200	50	62	247	436	328,5	190	17,5	G* 1/4	75	230	107,5	23,66

00181GB-2014/R01
Availability, design and specifications are subject to change without notice. All rights reserved.

Pneutrol International Limited
UK Office
5 Caulside Drive, Antrim, BT41 2DU
United Kingdom
TEL: +44 (0) 289448 1808
www.valves-direct.com

sales@pneutrol.com
European Office
Unit 6, Saint Anthony's Business Park, Ballymount Road, D22 VW95
Ireland
TEL: +353 (0) 1 4373653
www.valves-direct.com