UK Office
5 Caulside Drive
Antrim
BT41 2DU
United Kingdom
+44 (0) 28 9448 1808

European Office
Unit 6, Saint Anthony's Business Park
Dublin
D22 VW95
Ireland
+353 (0) 1 4373653

Maintenance unit, 2-part, Series NL1-ACD

- G 1/8 G 1/4
- filter porosity 5 µm
- with pressure gauge
- suitable for ATEX

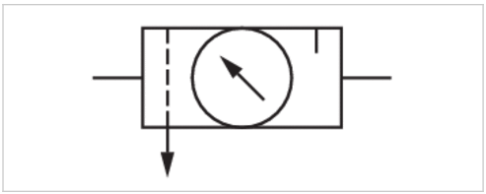

Version	2-in-1, Can be assembled into blocks
Parts	Filter pressure regulator, Micro oil-mist lubricator
Mounting orientation	vertical
Certificates	suitable for ATEX
Working pressure min./max.	1,5 ... 16 bar
Ambient temperature min./max.	-10 ... 60 °C
Medium temperature min./max.	-10 ... 60 °C
Medium	Compressed air Neutral gases
Nominal flow Qn	750 l/min
Regulator type	Diaphragm-type pressure regulator
Regulator function	with relieving air exhaust
Adjustment range min./max.	0,5 ... 10 bar
Pressure supply	single
Filter reservoir volume	16 cm³
Filter element	exchangeable
Condensate drain	See table below
Lubricator reservoir volume	35 cm³
Type of filling	Manual oil filling
Weight	See table below

Technical data

Part No.	Port	Flow	Condensate drain	Reservoir
		Qn		
0821300727	G 1/8	750 l/min	semi-automatic, open without pressure	Polycarbonate
0821300728	G 1/8	750 l/min	semi-automatic, open without pressure	Die cast zinc
0821300729	G 1/8	750 l/min	fully automatic, open without pressure	Polycarbonate
0821300730	G 1/4	750 l/min	semi-automatic, open without pressure	Polycarbonate
0821300731	G 1/4	750 l/min	semi-automatic, open without pressure	Die cast zinc
0821300732	G 1/4	750 l/min	fully automatic, open without pressure	Polycarbonate

Part No.	Weight
0821300727	0,564 kg
0821300728	0,645 kg
0821300729	0,617 kg
0821300730	0,564 kg
0821300731	0,645 kg
0821300732	0,617 kg

Metal protective guard can be retrofitted for all polycarbonate reservoirs, Nominal flow Qn with secondary pressure p2 = 6 bar at Δp = 1 bar

UK Office
5 Caulside Drive
Antrim
BT41 2DU
United Kingdom
+44 (0) 28 9448 1808

European Office
Unit 6, Saint Anthony's Business Park
Dublin
D22 VW95
Ireland
+353 (0) 1 4373653

Suitable for use in Ex zones 1, 2, 21, 22

Technical information

The pressure dew point must be at least 15 °C under ambient and medium temperature and may not exceed 3 °C .
Suitable for use in Ex zones 1, 2, 21, 22
Note: Polycarbonate reservoirs are susceptible to solvents, supplementary information can be found at "Customer information".
A change in the flow direction (from air supply on the left to air supply on the right) occurs by rotating installation by 180° about the vertical axis. Please see the operating instructions for further details.

Technical information

Material	
Housing	Die cast zinc
Front plate	Acrylonitrile butadiene styrene
Seals	Acrylonitrile butadiene rubber
Threaded bushing	Die cast zinc
Reservoir	Polycarbonate Die cast zinc
Protective guard	Polyamide
Filter insert	Polyethylene

UK Office
5 Caulside Drive
Antrim
BT41 2DU
United Kingdom
+44 (0) 28 9448 1808

European Office
Unit 6, Saint Anthony's Business Park
Dublin
D22 VW95
Ireland
+353 (0) 1 4373653

Dimensions

Dimensions

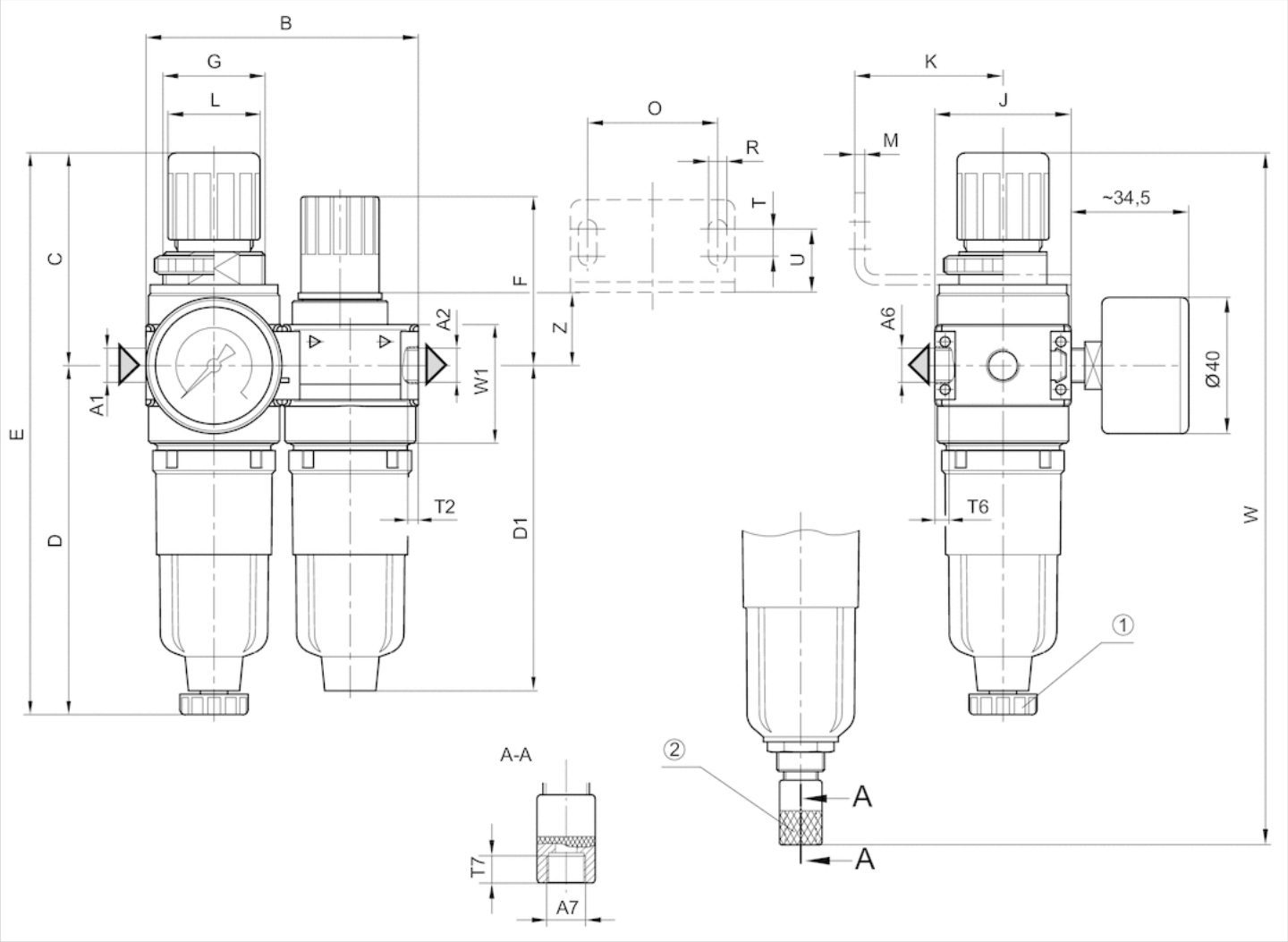

A1 = inputA2 = output
A6 = ventilation port
A7 = condensate drain
1) Semi-automatic condensate drain2) fully automatic condensate drain

Dimensions in mm

A1	A2	A6	A7	B	C	D	D1	E	F	G	J	K	L	M	O	R	T	T2	T6	T7
G 1/8	G 1/8	G 1/8	G 1/8	80	62.5	102.5	95.5	165	50	M30x1,5	40	43.5	27	3	38	5.4	8	8	6	8.5
G 1/4	G 1/4	G 1/8	G 1/8	80	62.5	102.5	95.5	165	50	M30x1,5	40	43.5	27	3	38	5.4	8	8	6	8.5

U	W	W1	Z
18.5	203	35	24.5
18.5	203	35	24.5

UK Office
5 Caulside Drive
Antrim
BT41 2DU
United Kingdom
+44 (0) 28 9448 1808

European Office
Unit 6, Saint Anthony's Business Park
Dublin
D22 VW95
Ireland
+353 (0) 1 4373653

Diagrams

minimum flow rate curve (flow rate necessary for the correct functioning of the lubricator)

p2 = secondary pressureqvmin. = min. nominal flow

Flow rate characteristic

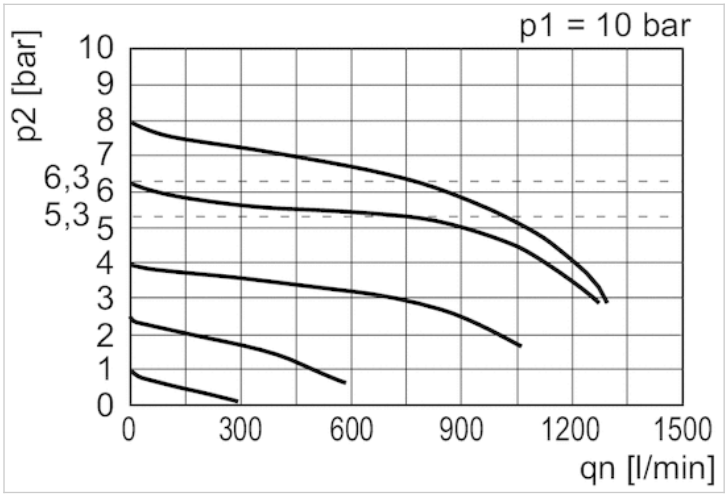

p1 = Working pressurep2 = Secondary pressureqn = Nominal flow