UK Office
5 Caulside Drive
Antrim
BT41 2DU
United Kingdom
+44 (0) 28 9448 1808

European Office
Unit 6, Saint Anthony's Business Park
Dublin
D22 VW95
Ireland
+353 (0) 1 4373653

3/2-shut-off valve, mechanically operated, Series NL1-BAV

- G 1/8
- lockable
- for padlocks
- suitable for ATEX

Version	Ball valve
Activation	Mechanical
Lock type	lockable
Actuating element	rotary switch
Sealing principle	metal/metal sealing
Certificates	suitable for ATEX
Nominal flow Qn	3000 l/min
Working pressure min./max.	0 ... 16 bar
Ambient temperature min./max.	-10 ... 60 °C
Medium temperature min./max.	-10 ... 60 °C
Medium	Compressed air Neutral gases
Weight	0,246 kg

Technical data

Part No.	Version	Compressed air connection	Compressed air connection
		Input	Output
0821300772	3/2	G 1/8	G 1/8
0821300773	3/2	G 1/4	G 1/4

Part No.	Compressed air connection	Flow	Flow	Lock type
	Exhaust	Qn 1 ▸ 2	Qn 2▸3	
0821300772	G 1/4	1800 l/min	70 l/min	for padlocks
0821300773	G 1/4	1800 l/min	70 l/min	for padlocks

Technical information

The pressure dew point must be at least 15 °C under ambient and medium temperature and may not exceed 3 °C .
Suitable for use in Ex zones 1, 2, 21, 22
A change in the flow direction (from air supply on the left to air supply on the right) occurs by rotating installation by 180° about the vertical axis. Please see the operating instructions for further details.

Technical information

Material	
Housing	Die cast zinc
Seals	Acrylonitrile butadiene rubber
Actuating element	Polyoxymethylene

UK Office
5 Caulside Drive
Antrim
BT41 2DU
United Kingdom
+44 (0) 28 9448 1808

European Office
Unit 6, Saint Anthony's Business Park
Dublin
D22 VW95
Ireland
+353 (0) 1 4373653

Dimensions

Dimensions

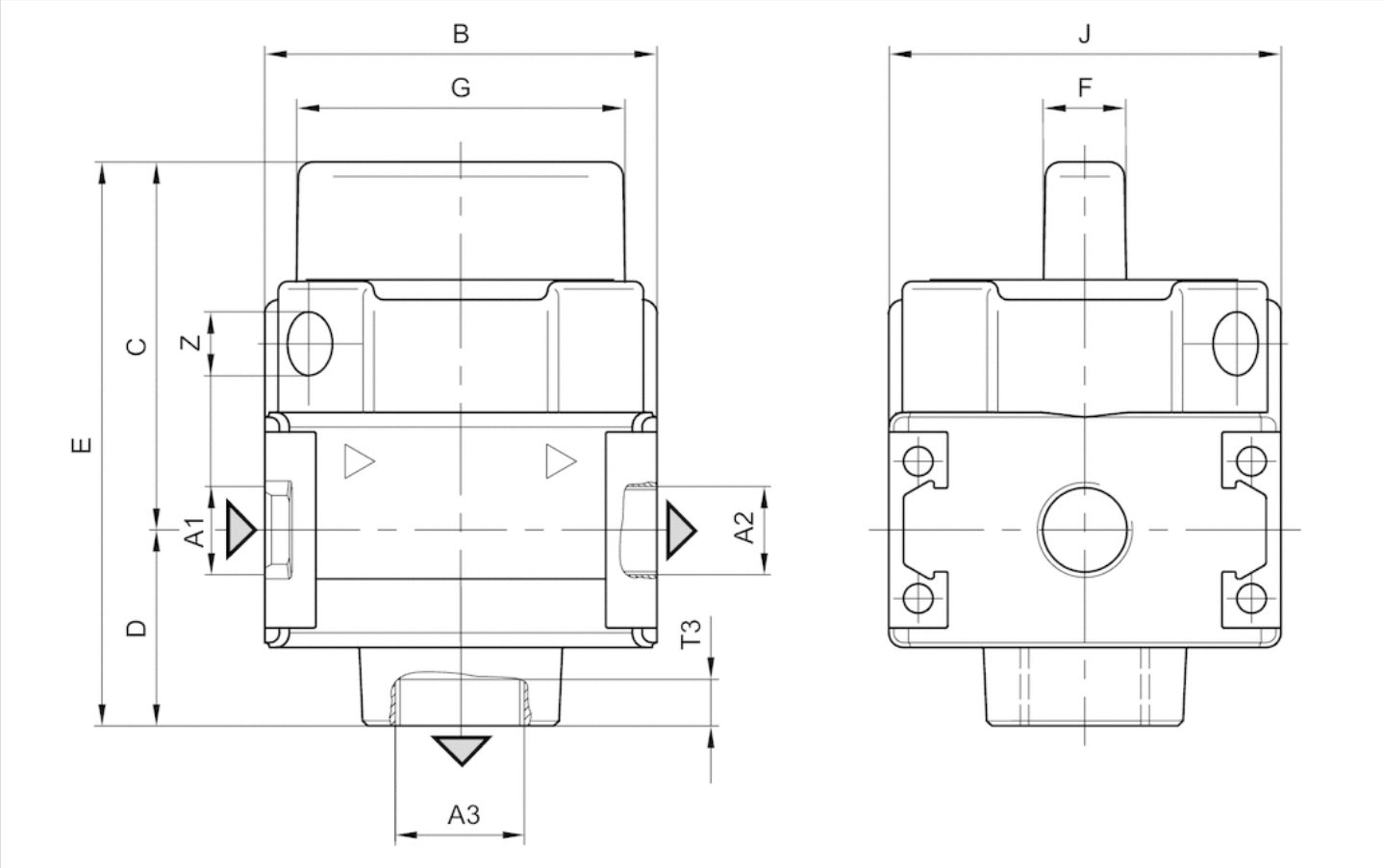

A1 = inputA2 = output
A3 = ventilation port

Dimensions in mm

A2	A3	B	C	D	E	F	G	J	T3	Z
G 1/8	G 1/4	40	37.6	20	57.6	8	33.5	40	10	6.5
G 1/4	G 1/4	40	37.6	20	57.6	8	33.5	40	10	6.5

UK Office
5 Caulside Drive
Antrim
BT41 2DU
United Kingdom
+44 (0) 28 9448 1808

European Office
Unit 6, Saint Anthony's Business Park
Dublin
D22 VW95
Ireland
+353 (0) 1 4373653

Diagrams

Flow rate characteristic

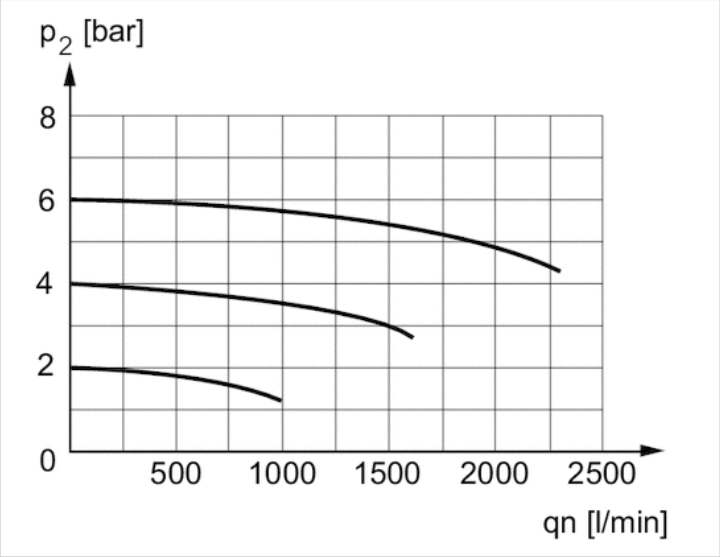

p2 = secondary pressureqn = nominal flow