UK Office
5 Caulside Drive
Antrim
BT41 2DU
United Kingdom
+44 (0) 28 9448 1808

European Office
Unit 6, Saint Anthony's Business Park
Dublin
D22 VW95
Ireland
+353 (0) 1 4373653

Pressure regulator

- Qn 1▸2 = 400 l/min
- Internal thread / External thread
- Poppet valve

Version	Poppet valve
Working pressure min./max.	1 ... 16 bar
Adjustment range min./max.	1 ... 8 bar
Ambient temperature min./max.	-10 ... 70 °C
Medium temperature min./max.	-10 ... 70 °C
Medium	Compressed air
Weight	See table

Technical data

Part No.	Compressed air connection	Compressed air connection type
	Input	Input
0821302078	G 1/8	Internal thread
0821302080	G 1/4	Internal thread
0821302081	G 3/8	Internal thread
0821302082	G 1/2	Internal thread
0821302079	G 1/8	Internal thread

Part No.	Compressed air connection	Compressed air connection type	Flow
	Output	Output	Qn 1▸2
0821302078	G 1/8	External thread	400 l/min
0821302080	G 1/4	External thread	600 l/min
0821302081	G 3/8	External thread	750 l/min
0821302082	G 1/2	External thread	750 l/min
0821302079	G 1/4	External thread	400 l/min

Part No.	Weight	Fig.
0821302078	0,08 kg	Fig. 1
0821302080	0,11 kg	Fig. 1
0821302081	0,075 kg	Fig. 1
0821302082	0,075 kg	Fig. 1
0821302079	0,11 kg	Fig. 2

Technical information

The pressure dew point must be at least 15 °C under ambient and medium temperature and may not exceed 3 °C .

UK Office
5 Caulside Drive
Antrim
BT41 2DU
United Kingdom
+44 (0) 28 9448 1808

European Office
Unit 6, Saint Anthony's Business Park
Dublin
D22 VW95
Ireland
+353 (0) 1 4373653

Technical information

Material	
Housing	Brass Polyamide Aluminum, galvanized black anodized
Seals	Acrylonitrile butadiene rubber

Dimensions

Fig. 1

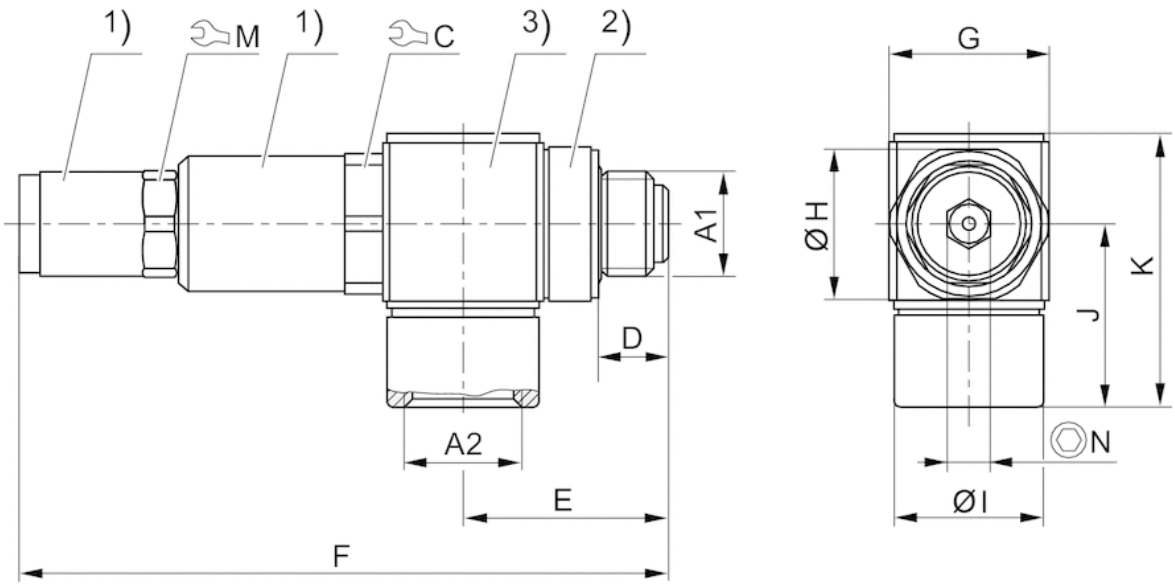

1) galvanized brass2) polyamide3) anodized black aluminum

Dimensions

Part No.	A1	A2	C	D	E	F	G	H	I	J	K	M	N
0821302078	G 1/8	G 1/8	17	6.3	19.8	70.8	15	15	13	18.5	26.7	13	5
0821302080	G 1/4	G 1/4	17	9.5	25.8	78.8	19	19	18	22.5	32.9	13	5
0821302081	G 3/8	G 3/8	22	9.5	29	85.2	23	23	23	28.5	41	17	6
0821302082	G 1/2	G 1/2	27	11.5	34	86.2	28	28	25	31	46.3	17	6

UK Office
5 Caulside Drive
Antrim
BT41 2DU
United Kingdom
+44 (0) 28 9448 1808

European Office
Unit 6, Saint Anthony's Business Park
Dublin
D22 VW95
Ireland
+353 (0) 1 4373653

Dimensions

Fig. 2

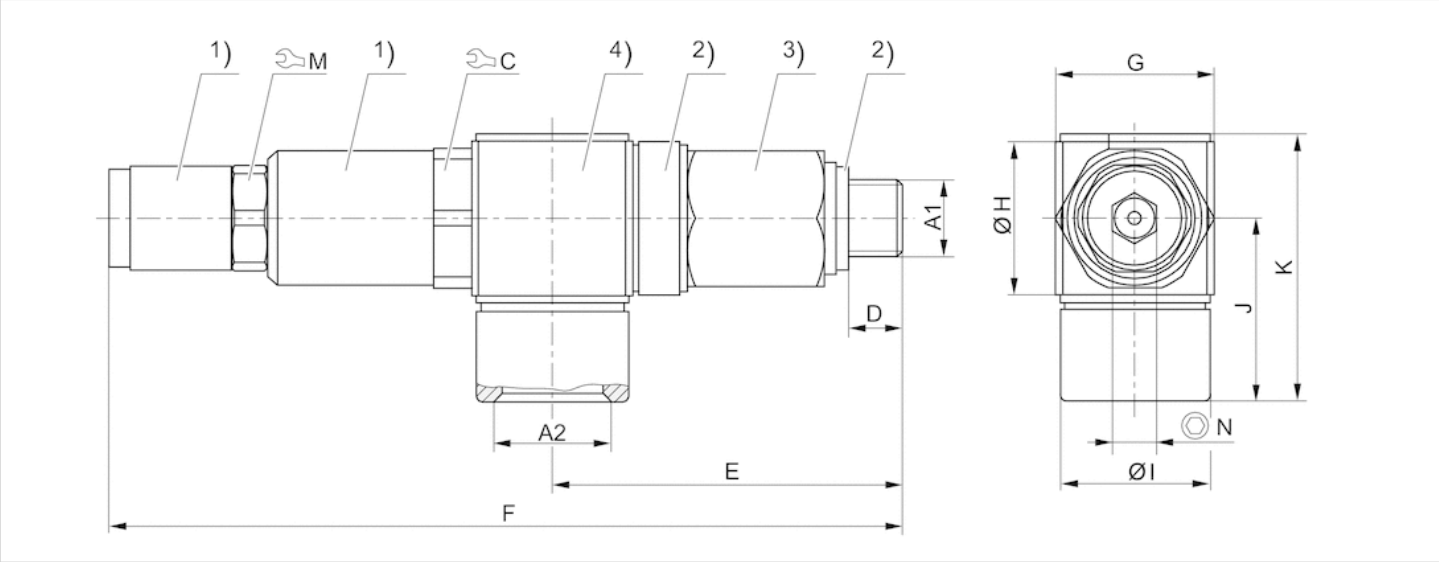

1) galvanized brass2) polyamide3) galvanized brass4) anodized black aluminum
A1 = inputA2 = output

Dimensions

Part No.	A1	A2	C	D	E	F	G	H	I	J	K	M	N
0821302079	G 1/8	G 1/4	17	6.5	42.3	95.3	19	19	18	22.5	32.9	13	6

Diagrams

Hysteresis

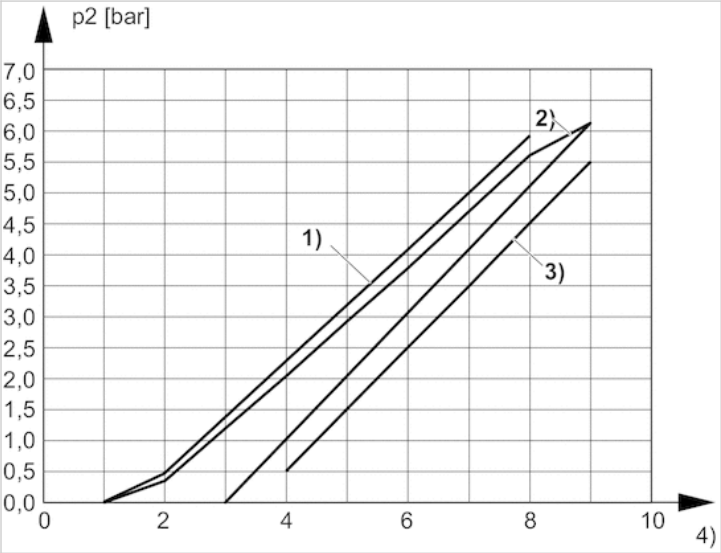

1) Overfill hysteresis
2) Control hysteresis
3) Refill hysteresis
4) Adjustment screw rotations

UK Office
5 Caulside Drive
Antrim
BT41 2DU
United Kingdom
+44 (0) 28 9448 1808

European Office
Unit 6, Saint Anthony's Business Park
Dublin
D22 VW95
Ireland
+353 (0) 1 4373653

Pressure characteristics curve (flow rate from 1 to 2)

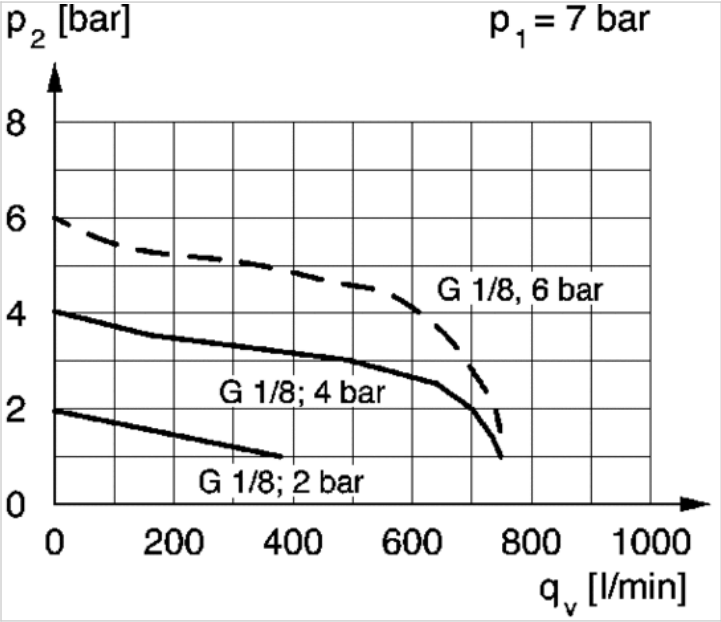

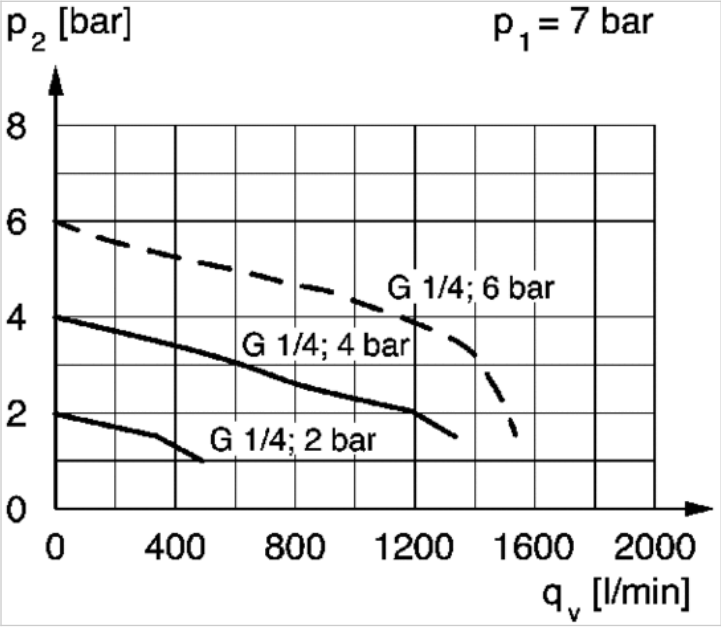

UK Office
5 Caulside Drive
Antrim
BT41 2DU
United Kingdom
+44 (0) 28 9448 1808

European Office
Unit 6, Saint Anthony's Business Park
Dublin
D22 VW95
Ireland
+353 (0) 1 4373653

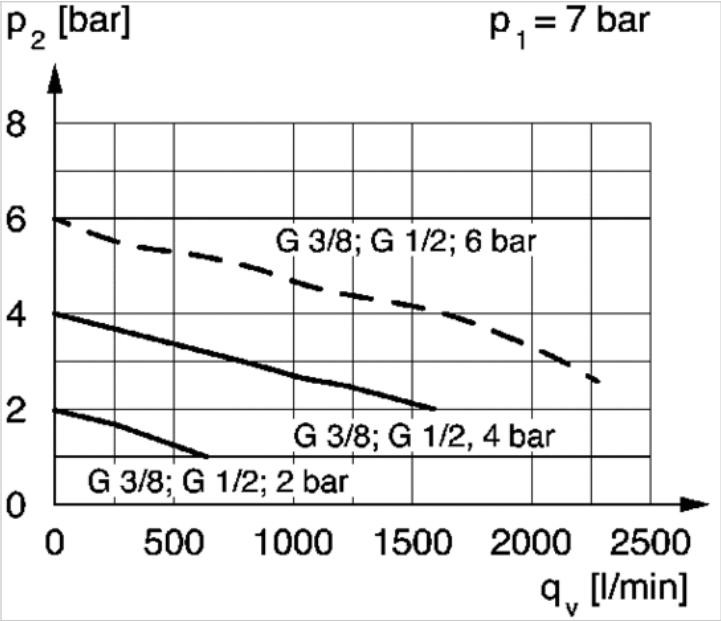

p1 = working pressure; p2 = secondary pressure; qv = nominal flow

Circuit diagram

Application example

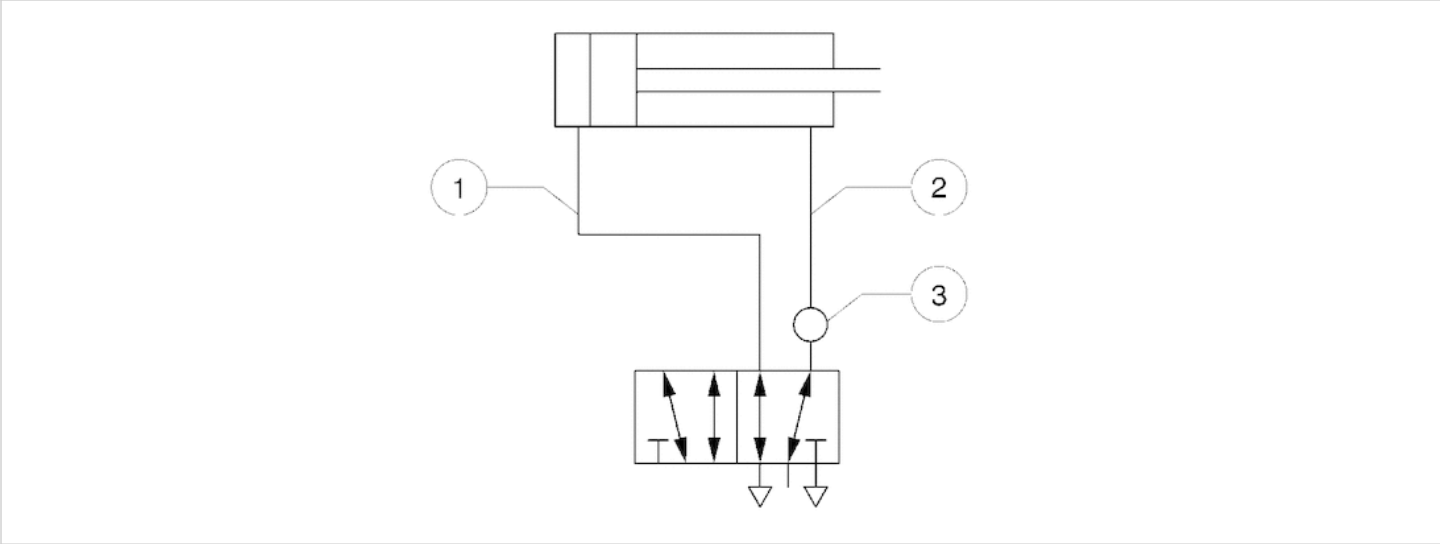

1) e.g. forward stroke with max. pressure2) return stroke with reduced pressure3) installation point on directional control valve
At low tightening torque, the sealing ring enables the banjo union to swivel through 360°. Further tightening locks the banjo union into position.
Adjust pressure via adjustment screw with hexagon socket. Lock using counter nuts.