UK Office
5 Caulside Drive
Antrim
BT41 2DU
United Kingdom
+44 (0) 28 9448 1808

European Office
Unit 6, Saint Anthony's Business Park
Dublin
D22 VW95
Ireland
+353 (0) 1 4373653

5/3-directional valve, Series 581, size 2

- ISO 5599-1
- ISO 2
- 5/3
- Qn = 2100 l/min
- Compressed air connection output Base plate ISO 5599-1
- Electrical connection Plug, 3-pin
- Manual override without detent

Version	Spool valve
Sealing principle	Soft sealing
Blocking principle	Single base plate principle
Connection type	Plate connection
Standards	ISO 5599-1, ISO 2
Working pressure min./max.	See table below
Control pressure min./max.	3 ... 10 bar
Ambient temperature min./max.	-10 ... 50 °C
Medium temperature min./max.	-10 ... 50 °C
Medium	Compressed air
Max. particle size	50 µm
Oil content of compressed air	0 ... 5 mg/m³
Nominal flow Qn	2100 l/min
Flow conductance C	8,9 l/(s*bar)
Protection class with connection	IP67
Protective circuit	Z-diode
Reverse polarity protection	Protected against polarity reversal
LED status display	Green
Duty cycle	100 %
Typ. switch-on time	14 ms
Typ. switch-off time	28 ms
Mounting screw	with hexagon socket
Mounting screw tightening torque	4 Nm
Weight	0,33 kg

Technical data

Part No.		MO	Operationalvoltage DC	Voltage tolerance DC	Power consumption DC
5812460160			24 V	-10% / +10%	2,2 W
5812461160			24 V	-10% / +10%	2,2 W
5812462160			24 V	-10% / +10%	2,2 W
5812463160			24 V	-10% / +10%	2,2 W
5812560160			24 V	-10% / +10%	2,2 W
5812561160			24 V	-10% / +10%	2,2 W
5812562160			24 V	-10% / +10%	2,2 W
5812563160			24 V	-10% / +10%	2,2 W
5812760160			24 V	-10% / +10%	2,2 W
5812761160			24 V	-10% / +10%	2,2 W

UK Office
5 Caulside Drive
Antrim
BT41 2DU
United Kingdom
+44 (0) 28 9448 1808

European Office
Unit 6, Saint Anthony's Business Park
Dublin
D22 VW95
Ireland
+353 (0) 1 4373653

Part No.		MO	Operationalvoltage DC	Voltage tolerance DC	Power consumption DC
5812762160			24 V	-10% / +10%	2,2 W
5812763160			24 V	-10% / +10%	2,2 W

Part No.	Pilot	Working pressure min./max.	Cable length	Electrical connection Pilot valve
5812460160	internal	3 ... 10 bar	0,5 m	Plug 3-pin
5812461160	internal	3 ... 10 bar	0,5 m	Plug 3-pin
5812462160	external	-0,95 ... 10 bar	0,5 m	Plug 3-pin
5812463160	external	-0,95 ... 10 bar	0,5 m	Plug 3-pin
5812560160	internal	3 ... 10 bar	0,5 m	Plug 3-pin
5812561160	internal	3 ... 10 bar	0,5 m	Plug 3-pin
5812562160	external	-0,95 ... 10 bar	0,5 m	Plug 3-pin
5812563160	external	-0,95 ... 10 bar	0,5 m	Plug 3-pin
5812760160	internal	3 ... 10 bar	0,5 m	Plug 3-pin
5812761160	internal	3 ... 10 bar	0,5 m	Plug 3-pin
5812762160	external	-0,95 ... 10 bar	0,5 m	Plug 3-pin
5812763160	external	-0,95 ... 10 bar	0,5 m	Plug 3-pin

Part No.	Protected against polarity reversal	Throttle
5812460160	Protected against polarity reversal	-
5812461160	Protected against polarity reversal	with throttle
5812462160	Protected against polarity reversal	-
5812463160	Protected against polarity reversal	with throttle
5812560160	Protected against polarity reversal	-
5812561160	Protected against polarity reversal	with throttle
5812562160	Protected against polarity reversal	-
5812563160	Protected against polarity reversal	with throttle
5812760160	Protected against polarity reversal	-
5812761160	Protected against polarity reversal	with throttle
5812762160	Protected against polarity reversal	-
5812763160	Protected against polarity reversal	with throttle

Connection 12 must be connected with atmospheres, Nominal flow Qn at 6 bar and Δp = 1 bar, MO = Manual override

Technical information

The min. control pressure must be adhered to, since otherwise faulty switching and valve failure may result!
The pressure dew point must be at least 15 °C under ambient and medium temperature and may not exceed 3 °C .
The oil content of compressed air must remain constant during the life cycle.
Use only the approved oils from AVENTICS. Further information can be found in the “Technical information” document (available in the MediaCentre).

UK Office
5 Caulside Drive
Antrim
BT41 2DU
United Kingdom
+44 (0) 28 9448 1808

European Office
Unit 6, Saint Anthony's Business Park
Dublin
D22 VW95
Ireland
+353 (0) 1 4373653

Technical information

Housing	Polyamide, fiber-glass reinforced
Seals	Acrylonitrile butadiene rubber

Dimensions

Dimensions

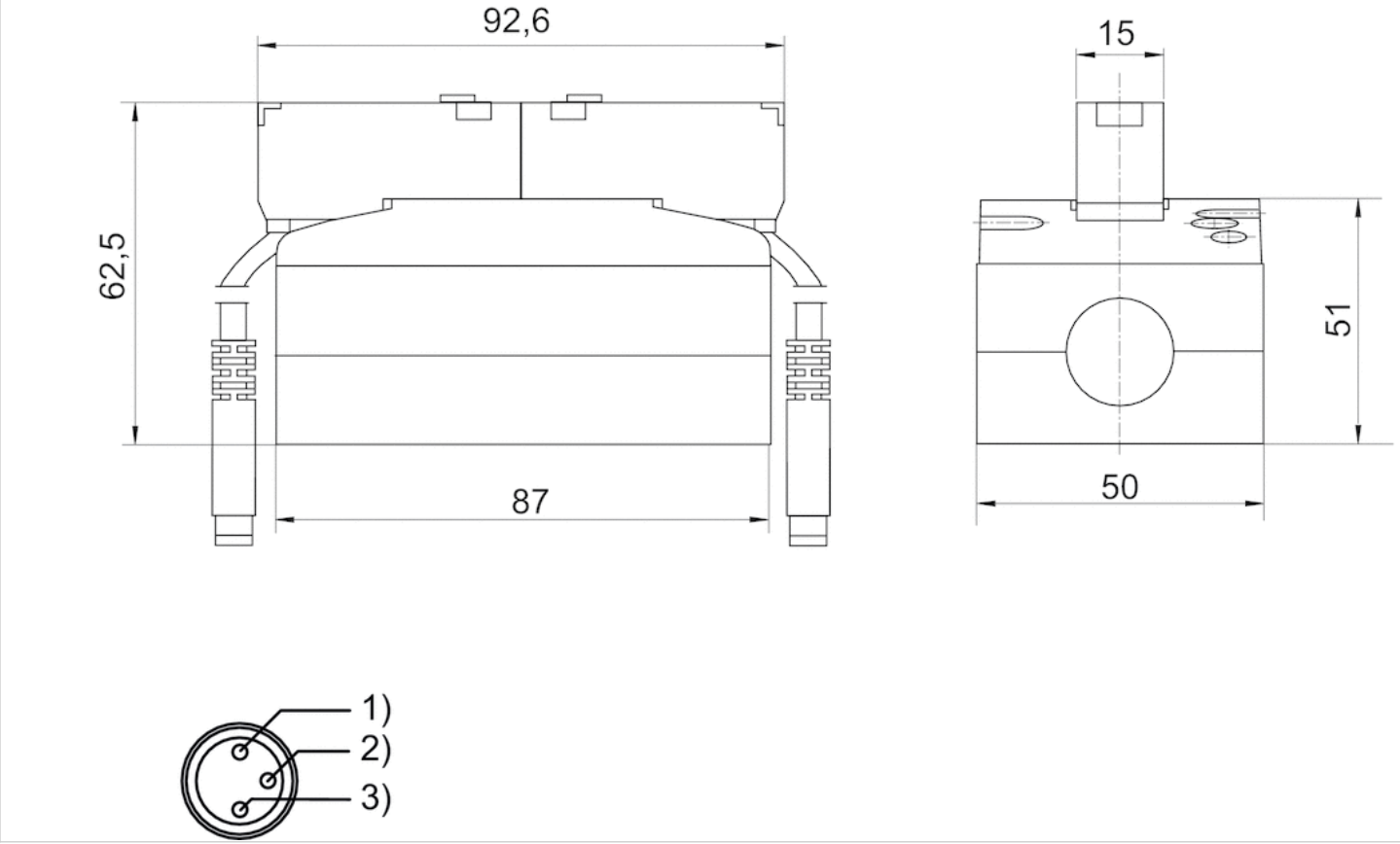

Pin assignment1) brown (+24 V)2) green/yellow (ground)3) blue (0 V)