UK Office
5 Caulside Drive
Antrim
BT41 2DU
United Kingdom
+44 (0) 28 9448 1808

European Office
Unit 6, Saint Anthony's Business Park
Dublin
D22 VW95
Ireland
+353 (0) 1 4373653

Mini cylinder, Series ICM

- Ø 12-32 mm
- Ports M5 G 1/8
- double-acting
- with magnetic piston
- Cushioning elastic
- corrosion-resistant
- with integrated rear eye
- Piston rod External thread
- suitable for use in food processing

Standards	ISO 6432
Compressed air connection	Internal thread
Working pressure min./max.	1 ... 10 bar
Ambient temperature min./max.	-20 ... 70 °C
Medium temperature min./max.	-20 ... 70 °C
Medium	Compressed air
Max. particle size	50 µm
Oil content of compressed air	0 mg/m³
Pressure for determining piston forces	6.3 bar

Technical data

Piston Ø Piston rod thread Ports	12 mm M6 M5	16 mm M6 M5	20 mm M8 G 1/8	25 mm M10x1,25 G 1/8	32 mm M10x1,25 G 1/8
Stroke 12	1331201000	1331601000	1332001000	1332501000	-
15	-	R404062574	R402001231	R404050979	-
20	-	-	-	R404054477	-
25	1331202000	1331602000	1332002000	1332502000	1333202000
30	-	-	R402001533	R404052834	R404050547
35	-	R404053760	R404063867	-	R404050533
40	-	-	R404051010	R402001019	-
50	1331205000	1331605000	1332005000	1332505000	1333205000
60	-	R404052973	R402001230	-	-
70	-	-	-	R404051389	R404051564
80	1331208000	1331608000	1332008000	1332508000	1333208000
100	1331210000	1331610000	1332010000	1332510000	1333210000
125	-	-	1332012000	1332512000	1333212000
160	-	R404063245	1332016000	1332516000	1333216000

UK Office
5 Caulside Drive
Antrim
BT41 2DU
United Kingdom
+44 (0) 28 9448 1808

European Office
Unit 6, Saint Anthony's Business Park
Dublin
D22 VW95
Ireland
+353 (0) 1 4373653

Piston Ø Piston rod thread Ports	12 mm M6 M5	16 mm M6 M5	20 mm M8 G 1/8	25 mm M10x1,25 G 1/8	32 mm M10x1,25 G 1/8
200	-	R404065638	R402001232	R402001235	1333220000
250	-	-	R404051220	R402001236	R404051390
300	-	-	R404053499	R404050518	-
320	-	-	R404008517	R404009055	-
400	-	-	R404001788	-	R404009214

Technical data

Piston Ø	12 mm	16 mm	20 mm	25 mm	32 mm
Retracting piston force	53 N	109 N	166 N	260 N	435 N
Extracting piston force	71 N	127 N	198 N	309 N	506 N
Weight 0 mm stroke	0,048 kg	0,054 kg	0,08 kg	0,1 kg	0,26 kg
Weight +10 mm stroke	0,005 kg	0,005 kg	0,01 kg	0,014 kg	0,022 kg
Stroke max.	100 mm	200 mm	400 mm	400 mm	400 mm

Technical information

The pressure dew point must be at least 15 °C under ambient and medium temperature and may not exceed 3 °C .
The oil content of compressed air must remain constant during the life cycle.
Use only the approved oils from AVENTICS. Further information can be found in the “Technical information” document (available in the MediaCentre).

Nut MR3 included in supply

Technical information

Material	
Cylinder tube	Stainless steel
Piston rod	Stainless steel
Front cover	Polyoxymethylene
End cover	Polyoxymethylene
Connection thread	Stainless steel
Seal	Acrylonitrile butadiene rubber
Nut for cylinder mounting	Polyamide
Nut for piston rod	Stainless steel
Scraper	Polyurethane

UK Office
5 Caulside Drive
Antrim
BT41 2DU
United Kingdom
+44 (0) 28 9448 1808

European Office
Unit 6, Saint Anthony's Business Park
Dublin
D22 VW95
Ireland
+353 (0) 1 4373653

Dimensions

Dimensions

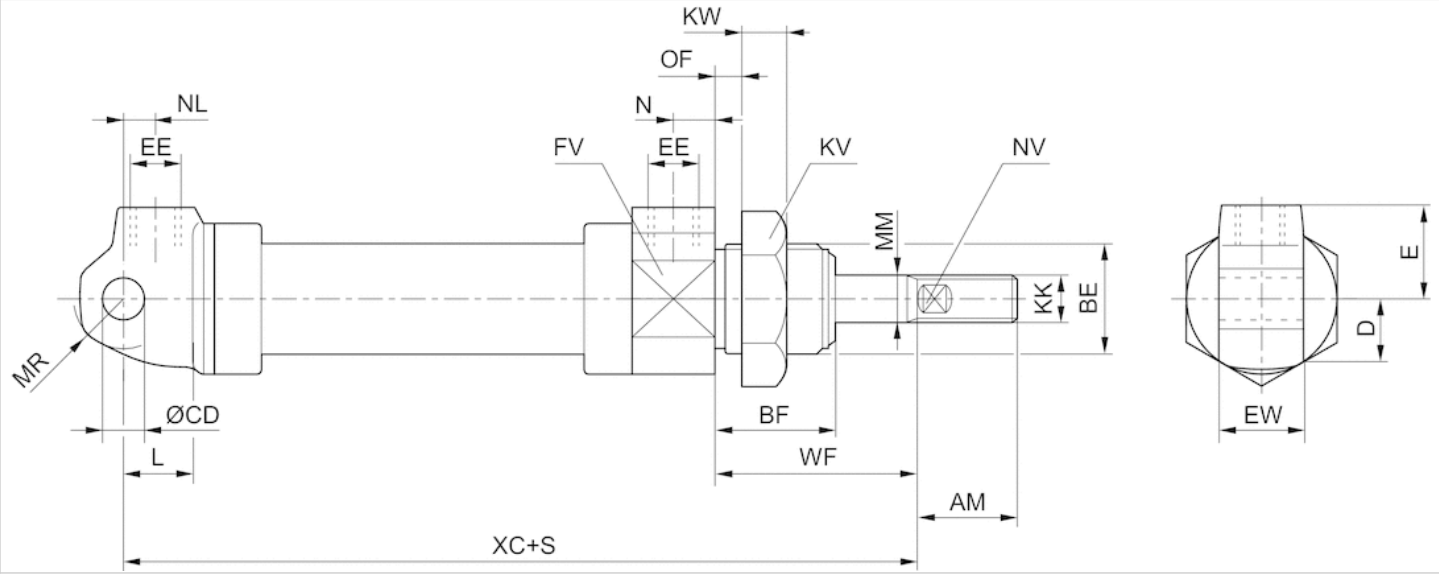

S = stroke

Dimensions

Piston Ø	AM+0/-2	BE	BF	CDH11	D	E	EE	EWd13	FV	KK	KV	KW	L	MM	MR	N
12 mm	16	M16x1,5	20	6	10	13.5	M5	12	20	M6	24	7	9	6	7.5	5
16 mm	16	M16x1,5	20	6	12	14	M5	12	24	M6	24	7	9	6	7.5	5
20 mm	20	M22x1,5	22	8	15	18	G 1/8	16	30	M8	30	8	12	8	10	8
25 mm	27	M22x1,5	22	8	17	18	G 1/8	16	34	M10x1,25	30	8	12	10	10	8
32 mm	32	M30x1,5	29	10	22.5	24	G 1/8	26	46	M10x1,25	41	11	13	12	15	10

Piston Ø	NL	NV	OF 1)	WF±1,2	XC±1
12 mm	7	4	10	22	75
16 mm	6	4	10	22	82
20 mm	7	6	10	24	95
25 mm	6.5	8	10	23	104
32 mm	10.5	11	14	38	128

1) Max.

UK Office
5 Caulside Drive
Antrim
BT41 2DU
United Kingdom
+44 (0) 28 9448 1808

European Office
Unit 6, Saint Anthony's Business Park
Dublin
D22 VW95
Ireland
+353 (0) 1 4373653

Accessories overview

Overview drawing

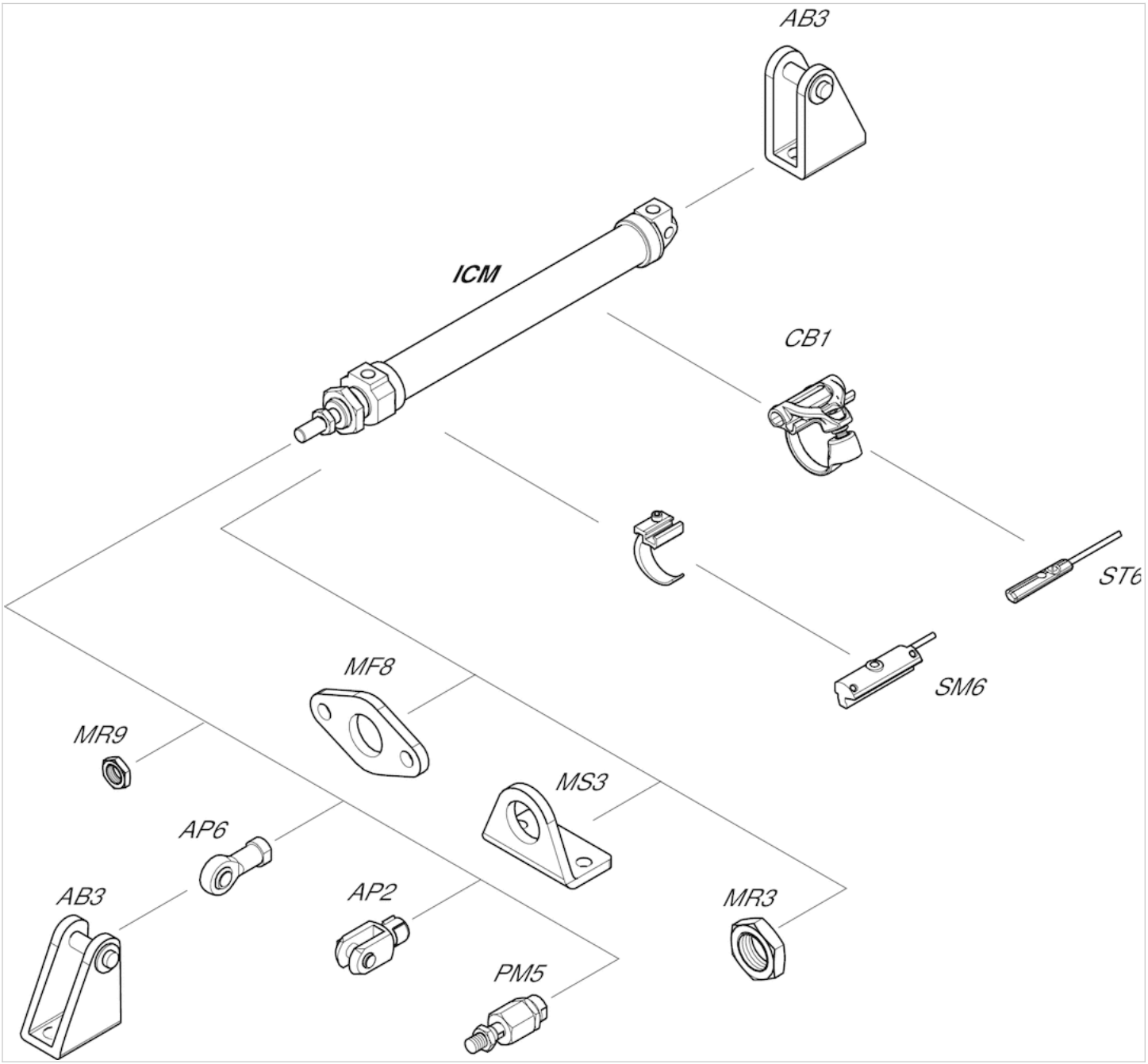

NOTE:This overview drawing is only for orientation to indicate where the various accessory parts can be fastened to the cylinder. The illustration has been simplified for this purpose. It is thus not possible to derive the dimensions from this overview.