UK Office
5 Caulside Drive
Antrim
BT41 2DU
United Kingdom
+44 (0) 28 9448 1808

European Office
Unit 6, Saint Anthony's Business Park
Dublin
D22 VW95
Ireland
+353 (0) 1 4373653

Rod clevis with lock washer, Series AP2

- to mount on cylinder CCL-IS/IC, CCI, SSI, CSL-RD, ICM, ICS-D2, 167

Weight See table

Technical data

Part No.	Suitable piston rod thread	for	Weight
3330510000	M4	SSI ICM	0,01 kg
3330516000	M6	CSL-RD SSI ICM	0,02 kg
3330520000	M8	CCL-IC CSL-RD CCI ICM	0,05 kg
3590502000	M10x1,25	CCL-IS CCL-IC CCI CSL-RD SSI ICM ICS-D2 167	0,1 kg
3590504000	M12x1,25	CCL-IS CCL-IC CCI SSI 167 ICS-D2	0,16 kg
3590505000	M16x1,5	CCL-IS ICS-D2 167	0,4 kg
3590508000	M20x1,5	CCL-IS ICS-D2 167	0,7 kg

Technical information

Material	
	Stainless steel

UK Office
5 Caulside Drive
Antrim
BT41 2DU
United Kingdom
+44 (0) 28 9448 1808

European Office
Unit 6, Saint Anthony's Business Park
Dublin
D22 VW95
Ireland
+353 (0) 1 4373653

Dimensions

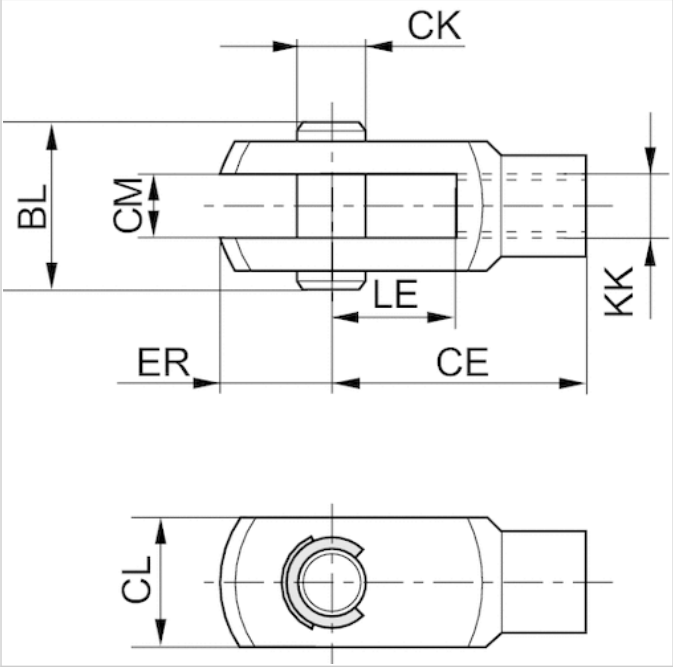

Dimensions

Part No.	KK	CE	CK e8	CL	CM B12	ER	BL	LE
3330510000	M4	16	4	10	5	6	15	8
3330516000	M6	24	6	12	6	7	17	12
3330520000	M8	32	8	16	8	10	22	16
3590502000	M10x1,25	40	10	20	10	12	26	20
3590504000	M12x1,25	48	12	24	12	14	31	24
3590505000	M16x1,5	64	16	32	16	19	39	32
3590508000	M20x1,5	80	20	40	20	20	49	40