UK Office
5 Caulside Drive
Antrim
BT41 2DU
United Kingdom
+44 (0) 28 9448 1808

European Office
Unit 6, Saint Anthony's Business Park
Dublin
D22 VW95
Ireland
+353 (0) 1 4373653

Series BCP

- Heat-resistant version
- double
- Stroke 108-190 mm

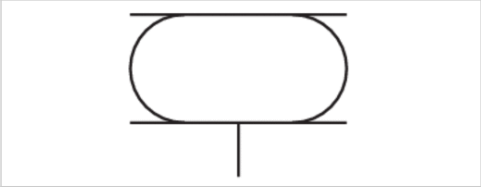

Version	Bellow actuator with cover
Functional principle	Single-acting, retracted without pressure
Working pressure min./max.	0 ... 8 bar
Ambient temperature min./max.	-20 ... 130 °C
Medium	Compressed air
Pressure for determining forces	6 bar
Weight	See table below

Technical data

Part No.	Cover diameter	Compressed air connection	Max. effective stroke
		G	
R412010213	108 mm	G 1/4	108 mm
R412010214	141 mm	G 3/4	153 mm
R412010476	228 mm	G 3/4	190 mm

Part No.	Min. radial installation space	Force min./max.	Weight	
R412010213	180 mm	3500 ... 8700 N	1,5 kg	-
R412010214	235 mm	7700 ... 14800 N	2,3 kg	1)
R412010476	340 mm	17000 ... 35400 N	4,8 kg	-

1) Once the minimum height H min. is reached, the bead height W can fall below the lower limit. If, for these products, level mounting surfaces greater than the cover diameter are selected, the return force and force output at the start of stroke increase. In the process, the rubber bellow is also compressed by the mounting surfaces. These products require more space upward, which can, in rare cases, present a hindrance. In any case, the specifications of the data sheets apply when using mounting surfaces in the size of the bellows actuator cover.

Technical information

Compliance with the minimum height H min. as well as the maximum height H max. must be ensured with end stops.
Use at operating height ≥ Hmax: only permitted upon approval by AVENTICS
Further information on vibration isolation can be found in the “Technical information” document (available in the MediaCentre).

Reduced service life at a temperature greater than 115 °C

UK Office
5 Caulside Drive
Antrim
BT41 2DU
United Kingdom
+44 (0) 28 9448 1808

European Office
Unit 6, Saint Anthony's Business Park
Dublin
D22 VW95
Ireland
+353 (0) 1 4373653

Technical information

Material	
Bellow	Epichlorohydrin rubber
Front cover	Steel, galvanized
End cover	Steel, galvanized

Dimensions

Comment

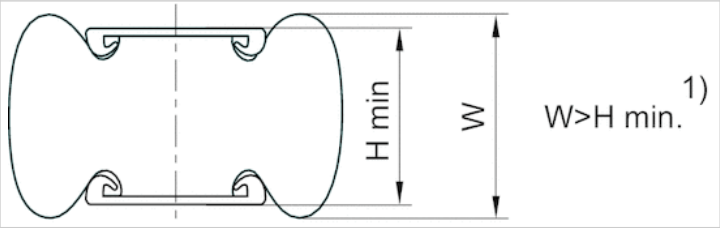

1) Once the minimum height H min. is reached, the bead height W can fall below the lower limit. If, for these products, level mounting surfaces greater than the cover diameter are selected, the return force and force output at the start of stroke increase. In the process, the rubber bellow is also compressed by the mounting surfaces. These products require more space upward, which can, in rare cases, present a hindrance. In any case, the specifications of the data sheets apply when using mounting surfaces in the size of the bellows actuator cover.
1 kN = 1000 N

Dimensions

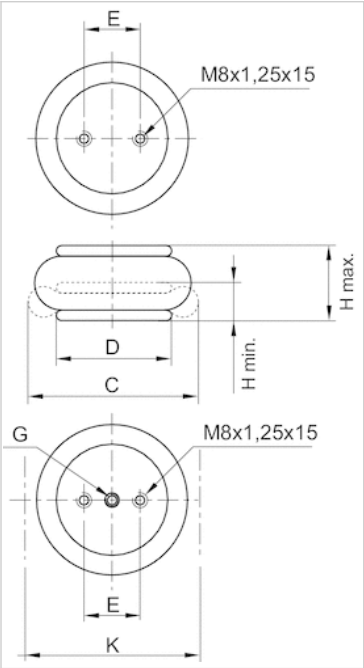

UK Office
5 Caulside Drive
Antrim
BT41 2DU
United Kingdom
+44 (0) 28 9448 1808

European Office
Unit 6, Saint Anthony's Business Park
Dublin
D22 VW95
Ireland
+353 (0) 1 4373653

Dimensions

Part No.	Compressed air connection G	H min. mm	H max. mm	C mm	D mm
R412010213	G 1/4	78 mm	180 mm	165 mm	108 mm
R412010214	G 3/4	83 mm	230 mm	218 mm	141 mm
R412010476	G 3/4	75 mm	305 mm	325 mm	228 mm

E ±0,5 [mm]	K mm	Return force, min. N
44.5	180 mm	200 N
70	235 mm	200 N
157,5	340 mm	300 N

Diagrams

Force-displacement diagram R412010213

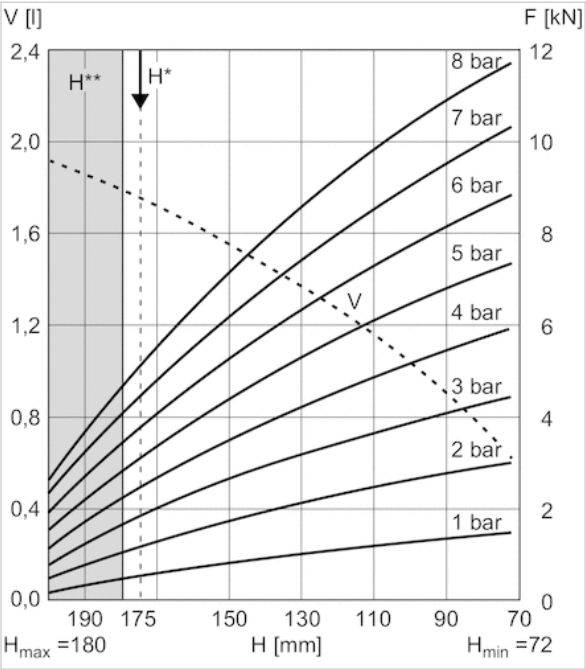

V = volumeH = heightH* = recommended operating height for vibration isolationH** = use permitted only upon approval by AVENTICS
1 kN = 1000 N

UK Office
5 Caulside Drive
Antrim
BT41 2DU
United Kingdom
+44 (0) 28 9448 1808

European Office
Unit 6, Saint Anthony's Business Park
Dublin
D22 VW95
Ireland
+353 (0) 1 4373653

Force-displacement diagram R412010214

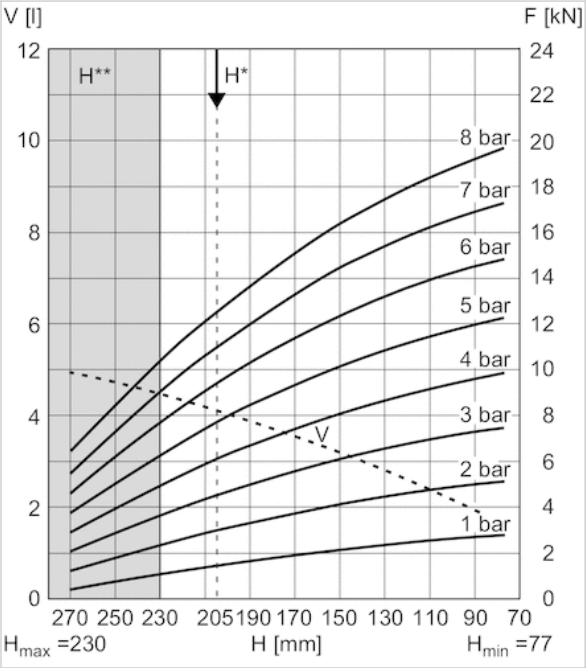

V = volumeH = heightH* = recommended operating height for vibration isolationH** = use permitted only upon approval by AVENTICS
1 kN = 1000 N

Force-displacement diagram R412010476

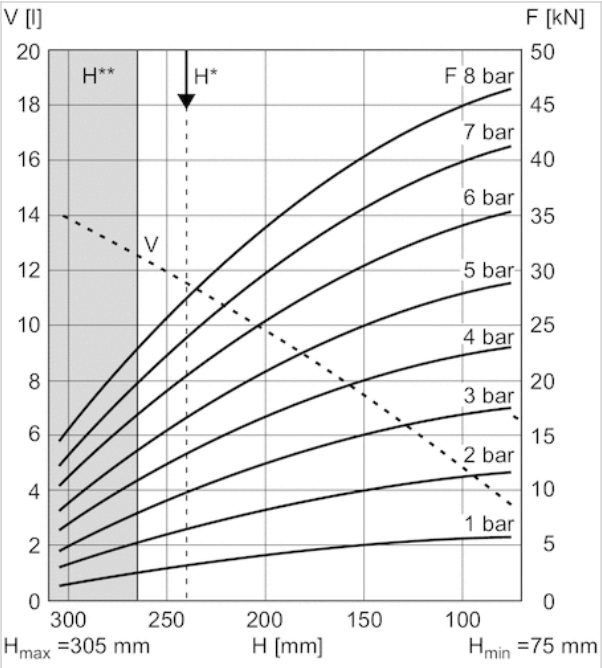

V = volumeH = heightH* = recommended operating height for vibration isolationH** = use permitted only upon approval by AVENTICS
1 kN = 1000 N