UK Office
5 Caulside Drive
Antrim
BT41 2DU
United Kingdom
+44 (0) 28 9448 1808

European Office
Unit 6, Saint Anthony's Business Park
Dublin
D22 VW95
Ireland
+353 (0) 1 4373653

Series BCP

- Corrosion-resistant version
- single
- Stroke 34-107 mm

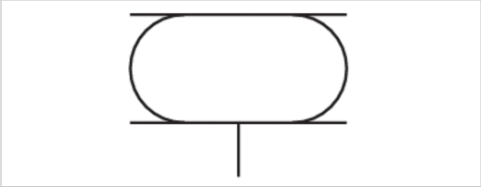

Working pressure min./max.	0 ... 8 bar
Ambient temperature min./max.	-40 ... 70 °C
Medium	Compressed air
Permissible angle of tilt max.	20 °
Weight	See table below

Technical data

Part No.	Cover diameter	Compressed air connection	Max. effective stroke
		G	
R412010215	108 mm	G 1/4	34 mm
R412010216	114 mm	G 1/4	79 mm
R412010217	141 mm	G 3/4	107 mm
R412010218	161 mm	G 3/4	74 mm
R412010219	228 mm	G 3/4	89 mm
R412010220	287 mm	G 3/4	104 mm

Part No.	Min. radial installation space	Force min./max.	Weight	Fig.
R412010215	165 mm	3500 ... 6900 N	1,2 kg	Fig. 2
R412010216	225 mm	4300 ... 10900 N	1,4 kg	Fig. 2
R412010217	250 mm	7000 ... 14000 N	1,9 kg	Fig. 2
R412010218	265 mm	9300 ... 17300 N	2,3 kg	Fig. 3
R412010219	340 mm	19400 ... 33300 N	3,9 kg	Fig. 3
R412010220	400 mm	26100 ... 50000 N	5,9 kg	Fig. 4

Technical information

Compliance with the minimum height H min. as well as the maximum height H max. must be ensured with end stops.
Use at operating height ≥ Hmax: only permitted upon approval by AVENTICS
Further information on vibration isolation can be found in the “Technical information” document (available in the MediaCentre).

Reduced service life at a temperature greater than 50 °C

UK Office
5 Caulside Drive
Antrim
BT41 2DU
United Kingdom
+44 (0) 28 9448 1808

European Office
Unit 6, Saint Anthony's Business Park
Dublin
D22 VW95
Ireland
+353 (0) 1 4373653

Technical information

Material	
Bellow	caoutchouc/butadiene caoutchouc
Front cover	Stainless steel
End cover	Stainless steel

Dimensions

Fig. 2

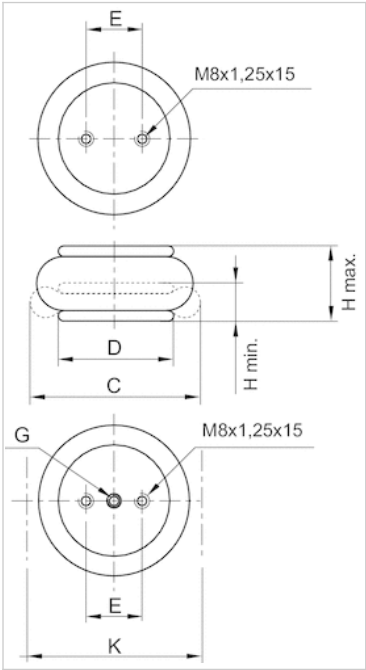

Dimensions

Part No.	Compressed air connection G	H min. mm	H max. mm	C mm	D mm
R412010215	G 1/4	51 mm	85 mm	150 mm	108 mm
R412010216	G 1/4	51 mm	-	210 mm	114 mm
R412010217	G 3/4	51 mm	-	235 mm	141 mm

E ±0,5 [mm]	K mm	Return force, min. N
44.5	165 mm	250 N
44.5	225 mm	45 N
70	250 mm	200 N

UK Office
5 Caulside Drive
Antrim
BT41 2DU
United Kingdom
+44 (0) 28 9448 1808

European Office
Unit 6, Saint Anthony's Business Park
Dublin
D22 VW95
Ireland
+353 (0) 1 4373653

Dimensions

Fig. 3

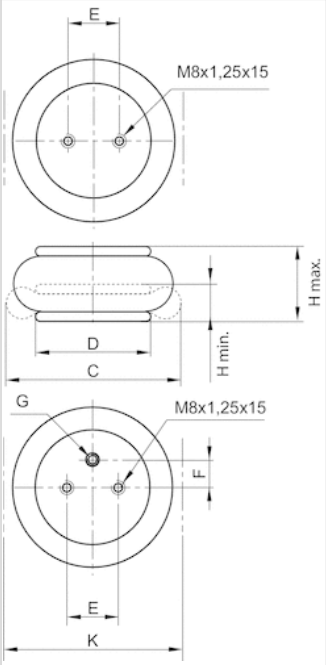

Dimensions

Part No.	Compressed air connection G	H min. mm	H max. mm	C mm	D mm
R412010218	G 3/4	51 mm	125 mm	250 mm	161 mm
R412010219	G 3/4	51 mm	-	325 mm	228 mm

E ±0,5 [mm]	F ±0,5 [mm]	K mm	Return force, min. N
89	38.1	265 mm	200 N
157.5	73	340 mm	300 N

UK Office
5 Caulside Drive
Antrim
BT41 2DU
United Kingdom
+44 (0) 28 9448 1808

European Office
Unit 6, Saint Anthony's Business Park
Dublin
D22 VW95
Ireland
+353 (0) 1 4373653

Dimensions

Fig. 4

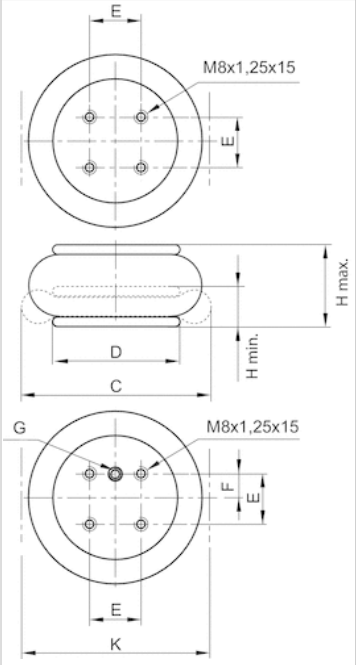

Dimensions

Part No.	Compressed air connection G	H min. mm	H max. mm	C mm	D mm
R412010220	G 3/4	51 mm	155 mm	385 mm	287 mm

E ±0,5 [mm]	F ±0,5 [mm]	K mm	Return force, min. N
158.8	79.4	400 mm	300 N

UK Office
5 Caulside Drive
Antrim
BT41 2DU
United Kingdom
+44 (0) 28 9448 1808

European Office
Unit 6, Saint Anthony's Business Park
Dublin
D22 VW95
Ireland
+353 (0) 1 4373653

Diagrams

Force-displacement diagram R412010215

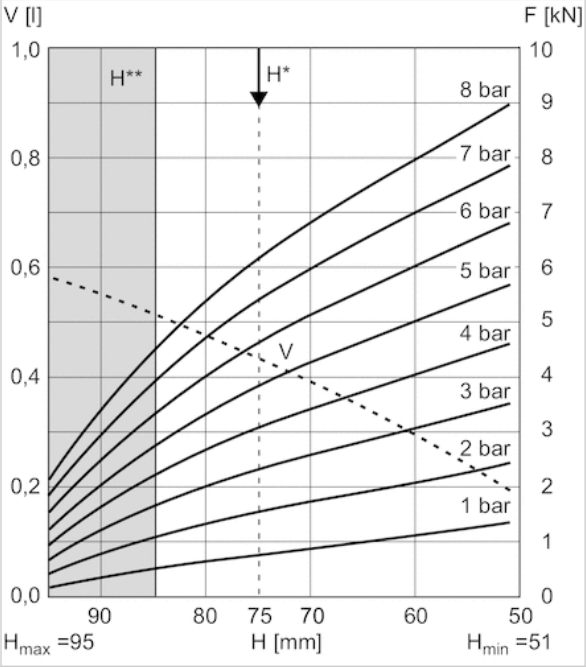

V = volumeH = heightH* = recommended operating height for vibration isolationH** = use permitted only upon approval by AVENTICS

Force-displacement diagram R412010216

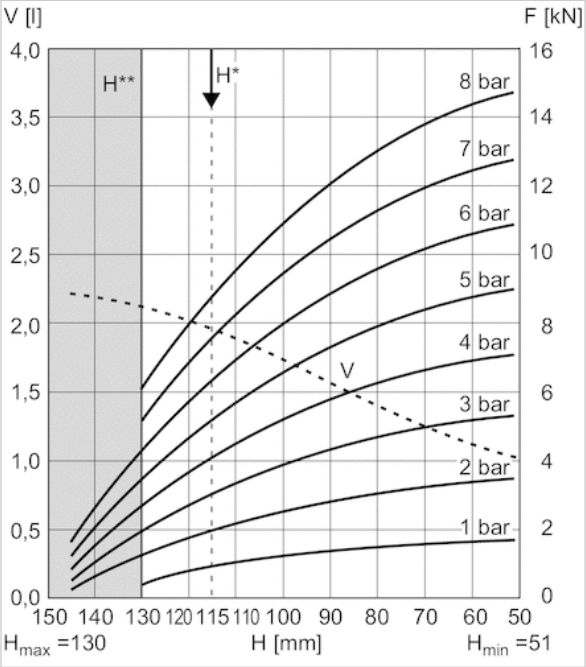

V = volumeH = heightH* = recommended operating height for vibration isolationH** = use permitted only upon approval by AVENTICS

UK Office
5 Caulside Drive
Antrim
BT41 2DU
United Kingdom
+44 (0) 28 9448 1808

European Office
Unit 6, Saint Anthony's Business Park
Dublin
D22 VW95
Ireland
+353 (0) 1 4373653

Force-displacement diagram R412010217

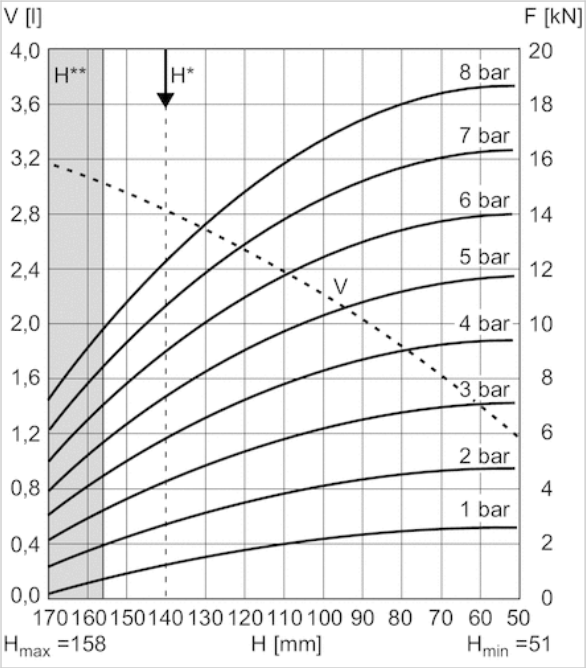

V = volumeH = heightH* = recommended operating height for vibration isolationH** = use permitted only upon approval by AVENTICS

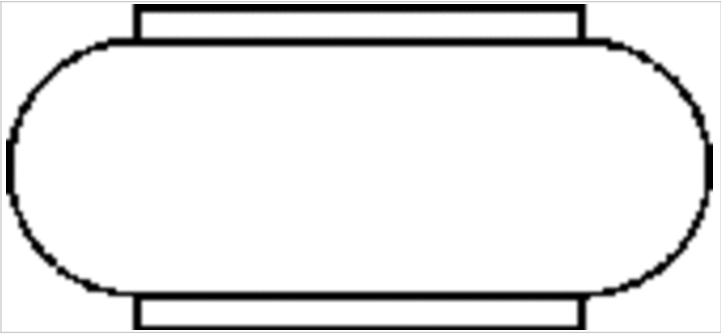

max. permissible parallel movement between the covers: 10 mm

UK Office
5 Caulside Drive
Antrim
BT41 2DU
United Kingdom
+44 (0) 28 9448 1808

European Office
Unit 6, Saint Anthony's Business Park
Dublin
D22 VW95
Ireland
+353 (0) 1 4373653

Force-displacement diagram R412010218

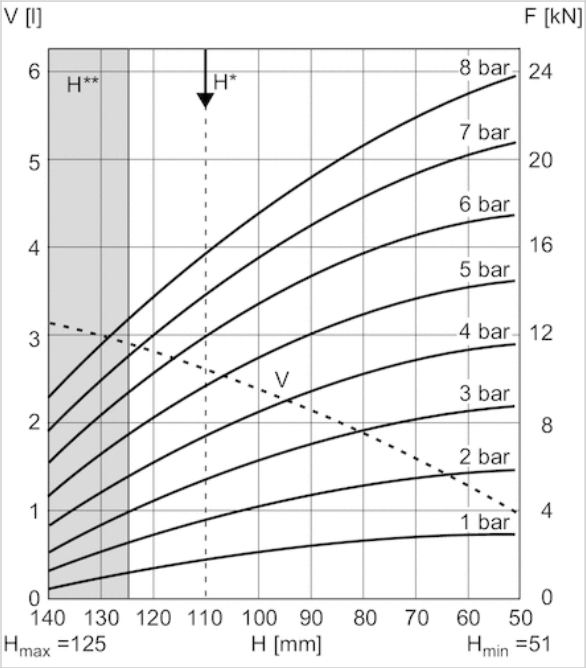

V = volumeH = heightH* = recommended operating height for vibration isolationH** = use permitted only upon approval by AVENTICS

Force-displacement diagram R412010219

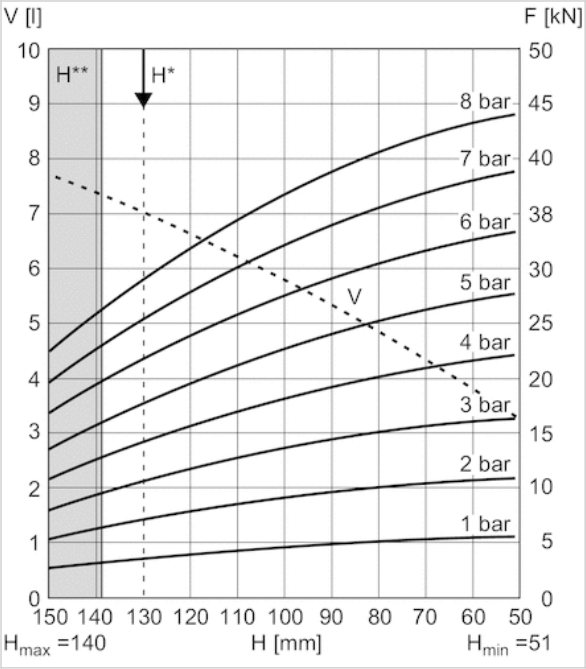

V = volumeH = heightH* = recommended operating height for vibration isolationH** = use permitted only upon approval by AVENTICS

UK Office
5 Caulside Drive
Antrim
BT41 2DU
United Kingdom
+44 (0) 28 9448 1808

European Office
Unit 6, Saint Anthony's Business Park
Dublin
D22 VW95
Ireland
+353 (0) 1 4373653

Force-displacement diagram R412010220

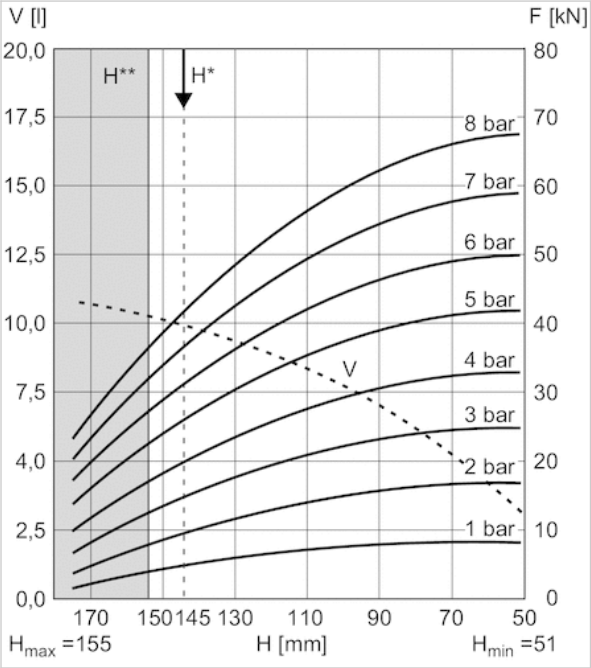

V = volumeH = heightH* = recommended operating height for vibration isolationH** = use permitted only upon approval by AVENTICS