UK Office
5 Caulside Drive
Antrim
BT41 2DU
United Kingdom
+44 (0) 28 9448 1808

European Office
Unit 6, Saint Anthony's Business Park
Dublin
D22 VW95
Ireland
+353 (0) 1 4373653

Series QR1-S Mini

- Elbow fitting
- External thread
- 1/8 NPT
- push-in fitting
- Ø1/4
- QR1-S-MVT

Working pressure min./max.	-0,95 ... 10 bar
Ambient temperature min./max.	0 ... 60 °C
Weight	0,005 kg
	Weight per piece

Technical data

Part No.	Port G	Port D	Delivery unit
R432000358	10-32 UNF	Ø1/8	25 piece
R432000356	10-32 UNF	Ø1/4	25 piece
R432000357	1/8 NPT	Ø1/8	25 piece
R432000359	1/8 NPT	Ø5/32	25 piece
R432000355	1/8 NPT	Ø1/4	25 piece

Technical information

The series QR1 (plastic) and QR2 (metal) can not be combined
Thread seal with captive O-ring
These pneumatic components with NPT or inch thread dimensions are only available from our US sales organization.

For further information about assembling and tolerances of adaptable tubing can be found in the “Technical information” document (available in the MediaCentre).

Technical information

Material	
Material	nickel-plated
Housing	Polybutyleneterephthalate
Seal	Acrylonitrile butadiene rubber
Tooth lock washer	Stainless steel
Release ring	Polyoxymethylene

UK Office
5 Caulside Drive
Antrim
BT41 2DU
United Kingdom
+44 (0) 28 9448 1808

European Office
Unit 6, Saint Anthony's Business Park
Dublin
D22 VW95
Ireland
+353 (0) 1 4373653

Material	
Release ring holder	Die cast zinc Brass, nickel-plated
Thread	Brass, nickel-plated

Dimensions

Dimensions in inches

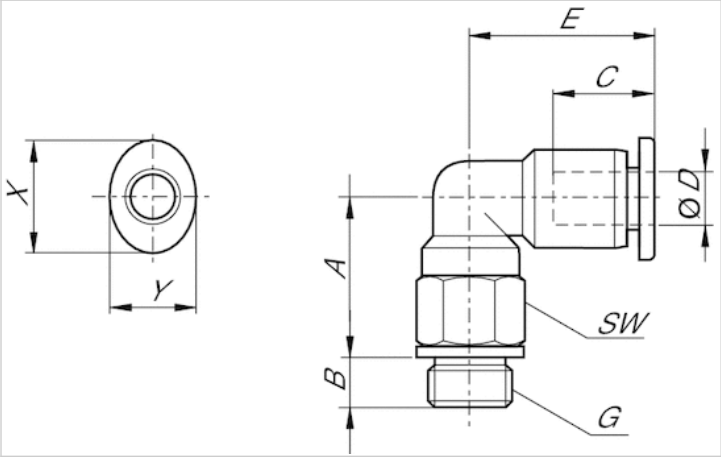

Dimensions in inches

Part No.	Port D	Port G	A	B	C	E	SW	X	Y
R432000358	Ø1/8	10-32 UNF	0.57	0.14	0.36	0.42	5/16	0.28	0.24
R432000356	Ø1/4	10-32 UNF	0.61	0.14	0.47	0.64	5/16	0.47	0.39
R432000357	Ø1/8	1/8 NPT	0.67	0.32	0.36	0.42	13/32	0.28	0.24
R432000359	Ø5/32	1/8 NPT	0.68	0.32	0.46	0.62	13/32	0.39	0.32
R432000355	Ø1/4	1/8 NPT	0.69	0.32	0.47	0.64	13/32	0.47	0.39