UK Office
5 Caulside Drive
Antrim
BT41 2DU
United Kingdom
+44 (0) 28 9448 1808

European Office
Unit 6, Saint Anthony's Business Park
Dublin
D22 VW95
Ireland
+353 (0) 1 4373653

Series QR1-S Mini

- T-union
- External thread
- 1/8 NPT
- push-in fitting
- Ø1/4
- QR1-S-MTT

Working pressure min./max.	-0,95 ... 10 bar
Ambient temperature min./max.	0 ... 60 °C
Weight	See table

Technical data

Part No.	Port G	Port D	Delivery unit	Weight
R432000342	10-32 UNF	Ø1/8	25 piece	0,005 kg
R432000344	10-32 UNF	Ø5/32	25 piece	0,005 kg
R432000340	10-32 UNF	Ø1/4	25 piece	0,005 kg
R432000341	1/8 NPT	Ø1/8	25 piece	0,009 kg
R432000343	1/8 NPT	Ø5/32	25 piece	0,009 kg
R432000339	1/8 NPT	Ø1/4	25 piece	0,009 kg

Technical information

The series QR1 (plastic) and QR2 (metal) can not be combined
Thread seal with captive O-ring
These pneumatic components with NPT or inch thread dimensions are only available from our US sales organization.

For further information about assembling and tolerances of adaptable tubing can be found in the “Technical information” document (available in the MediaCentre).

Technical information

Material	
Material	nickel-plated
Housing	Polybutyleneterephthalate
Seal	Acrylonitrile butadiene rubber
Tooth lock washer	Stainless steel

UK Office
5 Caulside Drive
Antrim
BT41 2DU
United Kingdom
+44 (0) 28 9448 1808

European Office
Unit 6, Saint Anthony's Business Park
Dublin
D22 VW95
Ireland
+353 (0) 1 4373653

Material	
Release ring	Polyoxymethylene
Release ring holder	Die cast zinc Brass, nickel-plated
Thread	Brass, nickel-plated

Dimensions

Dimensions in inches

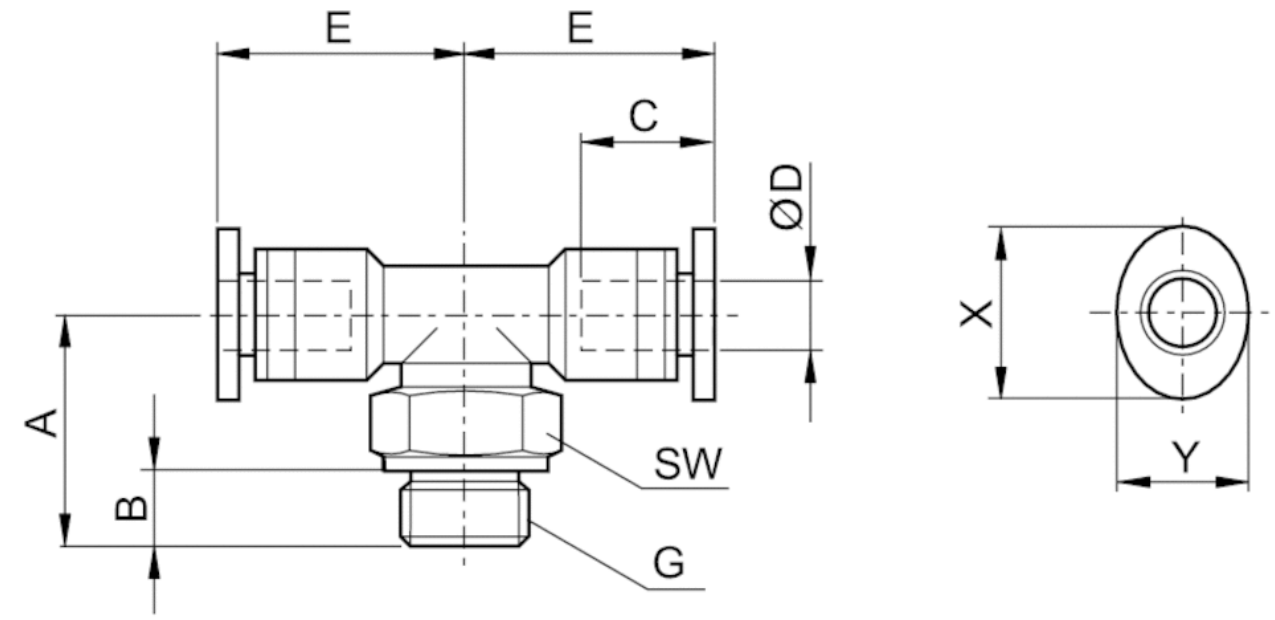

Dimensions in inches

Part No.	Port D	Port G	A	B	C	E	SW	X	Y
R432000342	Ø1/8	10-32 UNF	0.98	0.14	0.36	0.52	5/16	0.28	0.24
R432000344	Ø5/32	10-32 UNF	0.98	0.14	0.46	0.62	5/16	0.39	0.32
R432000340	Ø1/4	10-32 UNF	1.02	0.14	0.47	0.65	5/16	0.47	0.39
R432000341	Ø1/8	1/8 NPT	1.06	0.32	0.36	0.52	13/32	0.28	0.24
R432000343	Ø5/32	1/8 NPT	1.03	0.32	0.46	0.62	13/32	0.39	0.32
R432000339	Ø1/4	1/8 NPT	1.18	0.32	0.47	0.65	13/32	0.47	0.39